YAMAHA

PARTS CATALOGUE

YFM350FWBKC (4WU5) CALIFORNIA
YFM350FWBK (4WU6) U49
YFM350FWBK (4WU7) CANADA

YAMAHA GENUINE Parts & Accessories

184WU-100E1

A2

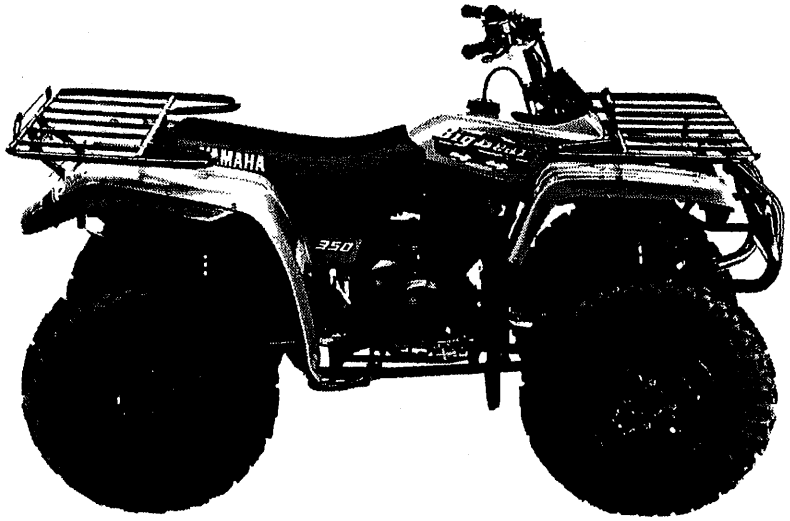

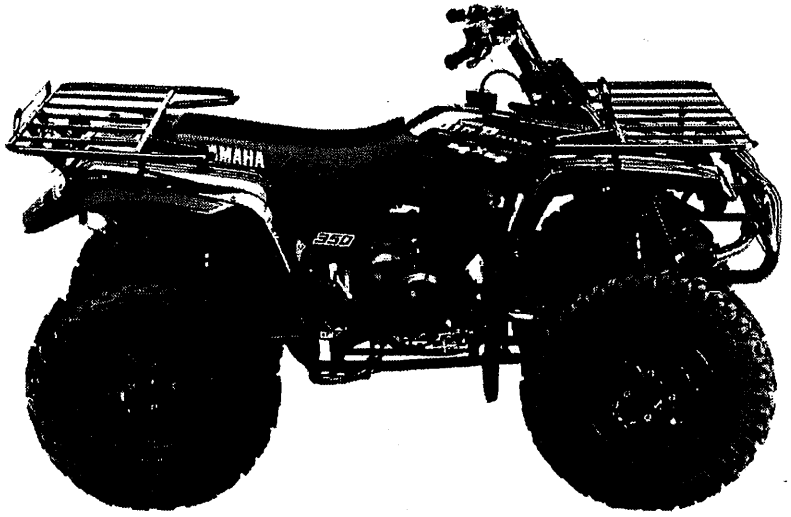

A3

FOREWORD

This Parts Catalogue is related to the parts for the model(s) in the below frame. When you are ordering replacement parts, please refer to this Parts Catalogue and quote both part numbers and part names correctly.

YFM350FWBKC(4WU5),YFM350FWBK(4WU6/7)

1. Modifications or additions which have been made after issue of the Parts Catalogue will be announced in the Yamaha Parts News.
   It is advisable that you make necessary corrections to the Parts Catalogue according to the Yamaha Parts News.
2. Abbreviations
   The Following abbreviations are used in this Parts Catalogue.
   "UR" Use specified parts number.
   "UN" Use as many as needed.
   "AP" Alternate Parts
   "UM" Local Made (Parts need to be ordered locally)
   "F#" Frame No. (Applicable machine No.)
3. Parts, which are to be supplied in an assembly, are listed with a dot(.) in front of the part name as shown below.
   EXAMPLE
   CARBURETOR ASSY
   .JET, PILOT
   .NOZZLE, MAIN
4. Number of component for assembly
   The numeral appearing to the right of each component part indicates the quantity of parts for each assembly unit.

EXAMPLE

PART NO.	DESCRIPTION	Q'TY	REMARKS
2F5-83310-60	FRONT FLASHER LIGHT ASSY	2	
115-83311-60	.BULB (6V-18W)	1	
1M1-83309-60	.REFLECTOR	1	

5. Applicable colors of graphics are represented in the "REMARKS" as shown below.

PART NO.	DESCRIPTION	Q'TY	REMARKS
2N4-24110-00-X5	.FUEL TANK COMP.	2	MXR
3J1-24240-10	.GRAPHIC, FUEL TANK	1	for MXR

6. Applicable Serial No.
   ① Engine Serial No. ② Frame Serial No.

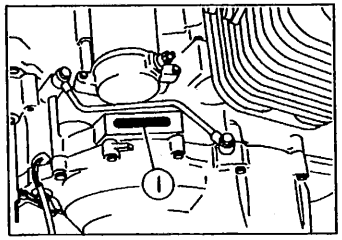

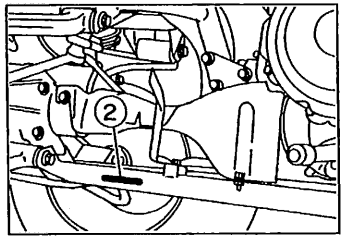

7. Note that the illustrations for reference in funding parts numbers, not to be used for assembling. When assembling, pleas use the applicable service manual.
8. The asterisk (*) before a reference number indicates modification items after the first edition.

MODEL LABEL

(1) A label called "Model Label" is affixed in the location as indicated in (3) below. When using this parts catalogue, please be sure to cross-refer the "model code – production code No." in the catalogue to the "model code – production code No. "indicated on the Model Label affixed onto the product concerned.

(2) "Model Label"Indication

① ②	
O xxxx – xxx	
● x ③	

① Model Type Code
② Production Code No.
③ Colouring Type

O	4TW1-010
●	A

(3) Model Label Affixing Location

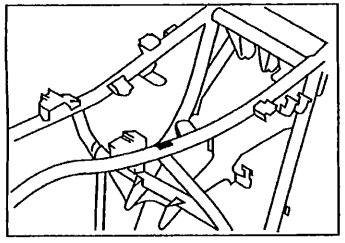

(4) Model Code – Production Code Number of Model Listed in This Parts Catalog

Model Code	Production Code No.	Country (destination)	Model Code	Production Code No.	Country (destination)
4WU5	010	CALIFORNIA			
4WU6	010	U49			
4WU7	010	CANADA			

(5) Colouning Information

Model Code	Colouring type code	Colour code	Colour Name	Abbreviation
4WU5/6/7	A	00TR	ROMANTIQUE ROUGE	RTR
	B	00K0	PASTEL DEEP GREEN	PDG
	C	0598	DARKGRAYISH YELLOW SOLID 1	DNYS1

CONTENTS

ENGINE

CYLINDER HEAD ---------- B2
CYLINDER ---------- B4
CRANKSHAFT. PISTON ---------- B5
VALVE ---------- B6
CAMSHAFT. CHAIN ---------- B7
OIL PUMP ---------- B8
INTAKE ---------- B10
CARBURETOR ---------- B11
EXHAUST ---------- B13
CRANKCASE ---------- B14
CRANKCASE COVER 1 ---------- B15
STARTER ---------- C3
STARTER CLUTCH ---------- C4
CLUTCH ---------- C5
TRANSMISSION ---------- C6
MIDDLE DRIVE GEAR ---------- C8
SHIFT CAM. FORK ---------- C10

CHASSIS

FRAME ---------- C12
FRONT FENDER ---------- C14
REAR FENDER ---------- D2
REAR ARM ---------- D4
DRIVE SHAFT ---------- D5
FRONT DIFFERENTIAL ---------- D7
REAR SUSPENSION ---------- D11
STEERING ---------- D12
FRONT SUSPENSION. WHEEL ---------- D13
FUEL TANK ---------- D14
SEAT ---------- D15
FRONT WHEEL ---------- E2
FRONT BRAKE ---------- E5
REAR WHEEL ---------- E7
STEERING HANDLE. CABLE ---------- E9
FRONT MASTER CYLINDER ---------- E11
STAND. FOOTREST ---------- E12
GUARD ---------- E13
GENERATOR ---------- E14
STARTING MOTOR ---------- E15
HEADLIGHT ---------- F2
TAILLIGHT ---------- F3
TAILLIGHT 2 ---------- F4
HANDLE SWITCH. LEVER ---------- F5
ELECTRICAL 1 ---------- F6
ELECTRICAL 2 ---------- F8
EMBLEM.LABEL 1 ---------- F9
EMBLEM.LABEL 2 ---------- F10
ALTERNATE (METER) ---------- F11

INDEX

NUMERICAL INDEX ---------- M1

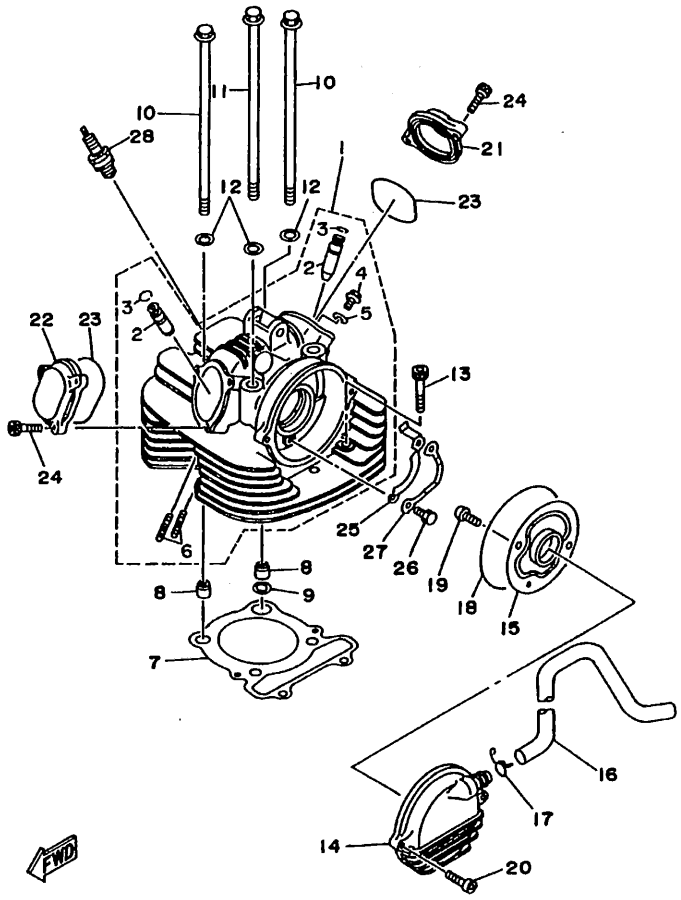

FIG. 1 CYLINDER HEAD

REF. NO.	PART NO.	DESCRIPTION	4WU5	4WU6	4WU7			REMARKS
1	4WU-11101-00	CYLINDER HEAD ASSY	1	1	1			
2	3Y1-11133-11	.GUIDE, INTAKE VALVE	2	2	2			
3	93440-12052	.CIRCLIP	2	2	2			
4	90401-06001	.BOLT, UNION	1	1	1			
5	90430-06192	.GASKET	1	1	1			
6	90116-06503	.BOLT, STUD	2	2	2			
7	1UY-11181-00	GASKET, CYLINDER HEAD 1	1	1	1			
8	99530-14016	PIN, DOWEL	2	2	2			
9	90430-14131	GASKET	1	1	1			
10	90105-10421	BOLT, WASHER BASED	2	2	2			
11	90105-10422	BOLT, WASHER BASED	2	2	2			
12	90201-10128	WASHER, PLATE	4	4	4			
13	91317-08050	BOLT	2	2	2			
14	4WU-11160-00	BREATHER ASSY	1	1	1			
15	4KB-11165-00	PLATE, BREATHER	1	1	1			
16	4WU-11166-00	PIPE, BREATHER 1	1	1	1			
17	90467-14015	CLIP	1	1	1			
18	93211-06635	O-RING	1	1	1			
19	92017-06012	BOLT, BUTTON HEAD	2	2	2			
20	91317-06025	BOLT	2	2	2			
21	2NL-11186-00	COVER, CYLINDER HEAD SIDE 2	1	1	1			
22	2NL-11187-00	COVER, CYLINDER HEAD SIDE 3	1	1	1			
23	93210-57634	O-RING	2	2	2			
24	91317-06020	BOLT	5	5	5			
25	3Y1-1111F-00	PLATE	1	1	1			
26	97007-06012	BOLT	2	2	2			
27	90215-06162	WASHER, LOCK	1	1	1			

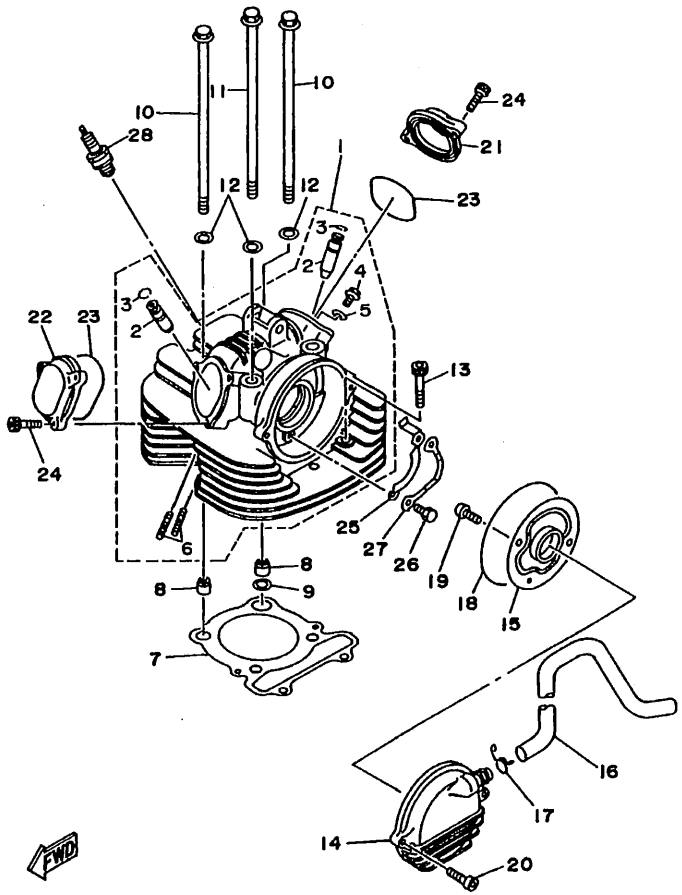

4WU1100-7010

FIG. 1 CYLINDER HEAD

REF. NO.	PART NO.	DESCRIPTION	4WU5	4WU6	4WU7			REMARKS
28	94701-00157	PLUG, SPARK (NGK D8EA)	1	1				UR
	94701-00181	PLUG, SPARK (ND X24ES-U)	1	1				UR
	94701-00333	PLUG, SPARK (NGK DR8EA)			1			

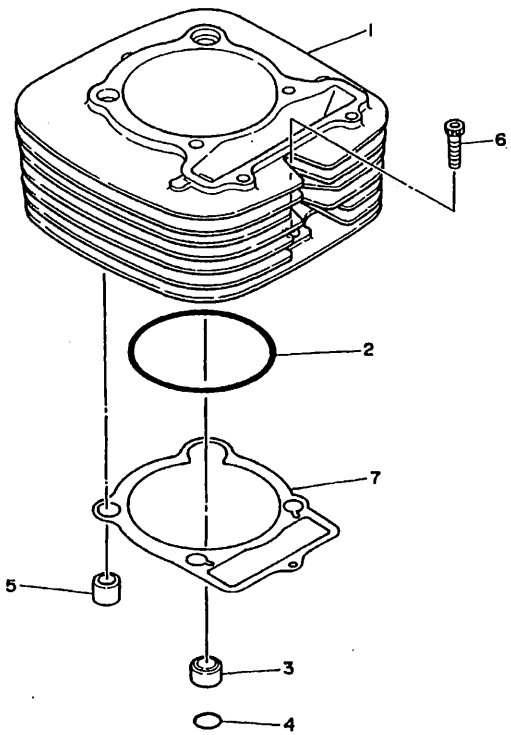

4KB1100-5020

FIG. 2 CYLINDER

REF. NO.	PART NO.	DESCRIPTION	4WU5	4WU6	4WU7			REMARKS
1	4WU-11310-00	CYLINDER	1	1	1			
2	93210-86509	O-RING	1	1	1			
3	90387-16547	COLLAR	1	1	1			
4	93210-18322	O-RING	1	1	1			
5	99530-14016	PIN, DOWEL	1	1	1			
6	91317-06030	BOLT	1	1	1			
7	4KB-11351-00	GASKET, CYLINDER	1	1	1			

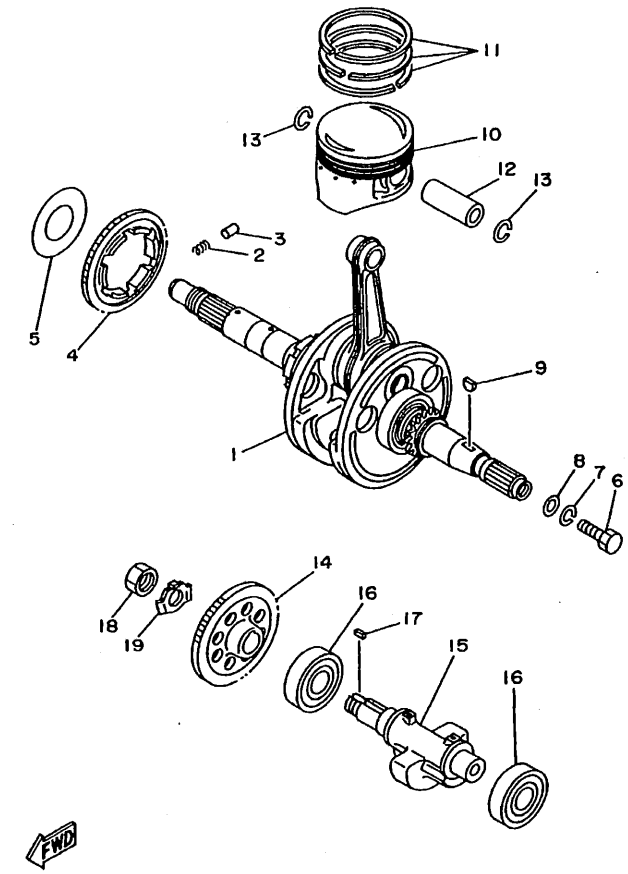

4KB1100-5030

FIG. 3 CRANKSHAFT. PISTON

REF. NO.	PART NO.	DESCRIPTION	4WU5	4WU6	4WU7			REMARKS
1	4KB-11400-00	CRANKSHAFT ASSY	1	1	1			
2	90501-22721	SPRING, COMPRESSION	6	6	6			
3	93605-10090	PIN, DOWEL	3	3	3			
4	3Y1-11531-01	GEAR, BALANCE (43T)	1	1	1			
5	4KB-11565-00	WASHER, BEARING COVER	1	1	1			
6	90101-10568	BOLT	1	1	1			
7	92907-10100	WASHER, SPRING	1	1	1			
8	90201-107F8	WASHER, PLATE	1	1	1			
9	90280-05048	KEY, WOODRUFF	1	1	1			
10	1YW-11631-01-Y0	PISTON (STD)	1	1	1			
	1YW-11636-01	PISTON (0.50MM O/S)	1	1	1			AP
	1YW-11638-01	PISTON (1.00MM O/S)	1	1	1			AP
11	4GB-11610-00	PISTON RING SET (STD)	1	1	1			
	4GB-11610-20	PISTON RING SET (0.50MM O/S)	1	1	1			AP
	4GB-11610-40	PISTON RING SET (1.00MM O/S)	1	1	1			AP
12	55V-11633-00	PIN, PISTON	1	1	1			
13	93450-19095	CIRCLIP	2	2	2			
14	4KB-11536-00	GEAR, DRIVE	1	1	1			
15	1UY-11454-00	WEIGHT 1	1	1	1			
16	93306-20532	BEARING	2	2	2			
17	90282-05034	KEY, STRAIGHT	1	1	1			
18	90170-16326	NUT	1	1	1			
19	90215-16270	WASHER, LOCK	1	1	1			

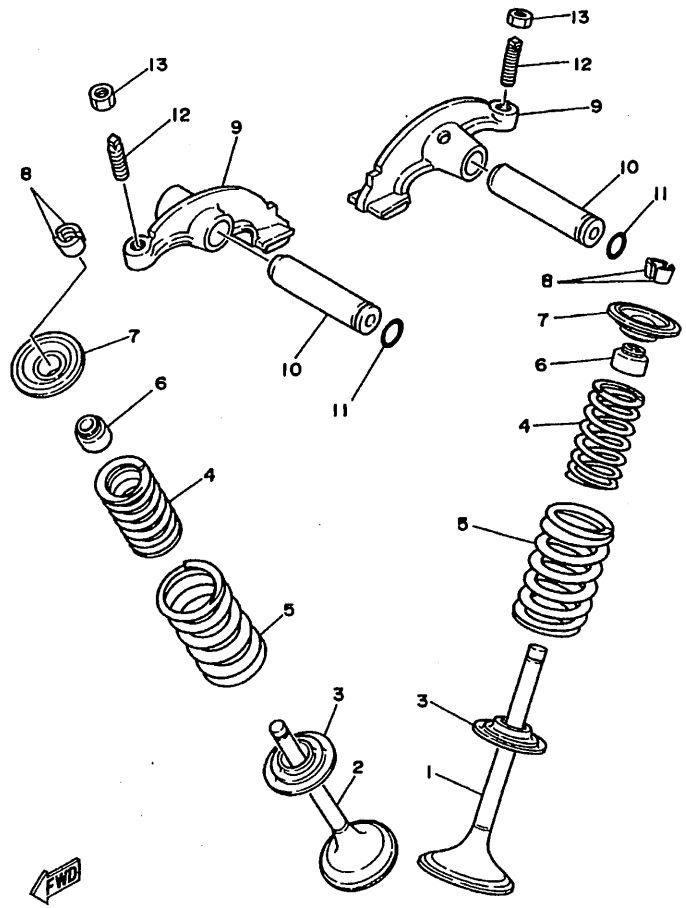

3GD3110-9040

FIG. 4 VALVE

REF. NO.	PART NO.	DESCRIPTION	4WU5	4WU6	4WU7			REMARKS
1	3Y1-12111-01	VALVE, INTAKE	1	1	1			
2	3Y1-12121-01	VALVE, EXHAUST	1	1	1			
3	3Y1-12116-00	SEAT, VALVE SPRING	2	2	2			
4	1UY-12113-01	SPRING, VALVE INNER	2	2	2			
5	1UY-12114-01	SPRING, VALVE OUTER	2	2	2			
6	1J7-12119-01	SEAL, VALVE STEM	2	2	2			
7	3Y1-12117-01	RETAINER, VALVE SPRING	2	2	2			
8	1J7-12118-00	COTTER, VALVE	4	4	4			
9	3GD-12151-00	ARM, VALVE ROCKER	2	2	2			
10	3Y1-12156-00	SHAFT, ROCKER 2	2	2	2			
11	93210-09165	O-RING	2	2	2			
12	31G-12159-02	SCREW, VALVE ADJUSTING	2	2	2			
13	31G-12158-00	NUT, LOCK	2	2	2			

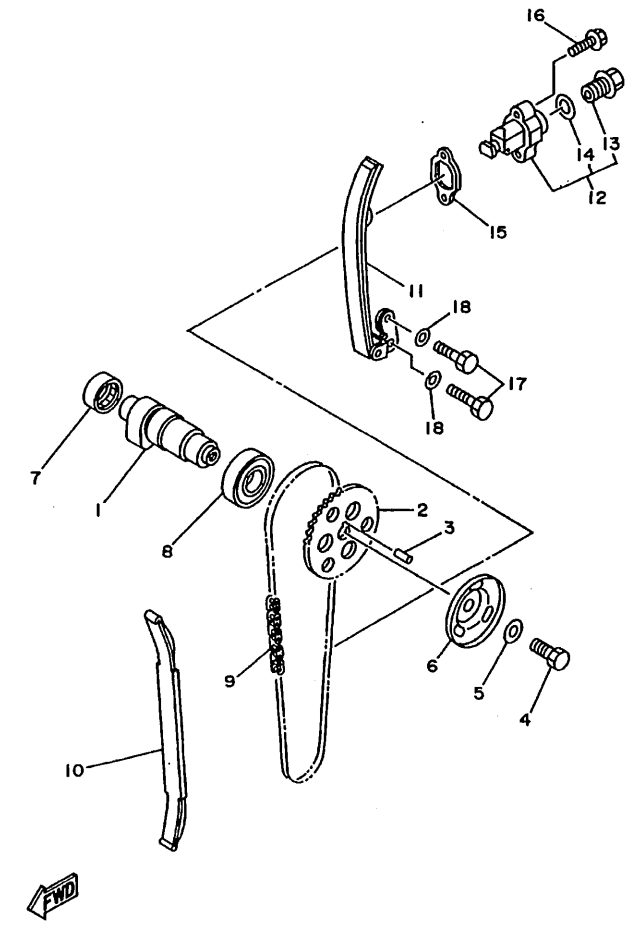

4KB1100-5050

FIG. 5 CAMSHAFT. CHAIN

REF. NO.	PART NO.	DESCRIPTION	4WU5	4WU6	4WU7			REMARKS
1	1YW-12170-00	CAMSHAFT ASSY 1	1	1	1			
2	3HN-12176-00	SPROCKET, CAM CHAIN	1	1	1			
3	93604-10011	PIN, DOWEL	1	1	1			
4	90101-10303	BOLT	1	1	1			
5	90201-10591	WASHER, PLATE	1	1	1			
6	4KB-11145-00	PLATE, BREATHER 2	1	1	1			
7	93315-32516	BEARING	1	1	1			
8	93306-00515	BEARING	1	1	1			
9	94500-02090	CHAIN (BF05M 90L)	1	1	1			
10	3Y1-12231-01	GUIDE, STOPPER 1	1	1	1			
11	4KB-12241-00	GUIDE, STOPPER 2	1	1	1			
12	31G-12210-01	TENSIONER ASSY, CAM CHAIN	1	1	1			
13	31G-12222-00	.PLUG	1	1	1			
14	31G-12214-00	.GASKET	1	1	1			
15	3GD-12213-00	GASKET, TENSIONER CASE	1	1	1			
16	95027-06025	BOLT, FLANGE	2	2	2			
17	97027-06016	BOLT	2	2	2			
18	92907-06600	WASHER, PLATE	2	2	2			

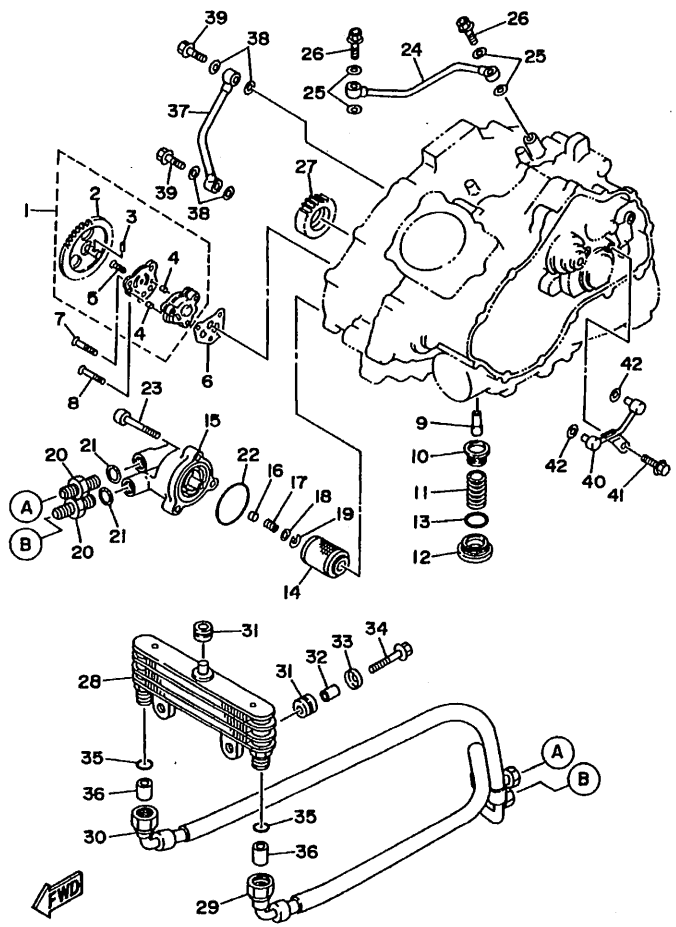

FIG. 6 OIL PUMP

REF. NO.	PART NO.	DESCRIPTION	4WU5	4WU6	4WU7			REMARKS
1	1UY-13300-00	OIL PUMP ASSY	1	1	1			
2	1UY-13326-00	.GEAR, PUMP DRIVEN 2	1	1	1			
3	93603-12030	.PIN, DOWEL	1	1	1			
4	93603-07073	.PIN, DOWEL	2	2	2			
5	90151-06010	.SCREW, COUNTERSUNK	1	1	1			
6	3GD-13329-00	GASKET, PUMP COVER	1	1	1			
7	98707-06030	SCREW, FLAT HEAD	2	2	2			
8	90151-06058	SCREW, COUNTERSUNK	1	1	1			
9	2XK-13416-00	PIPE, OIL 1	1	1	1			
10	51Y-13411-00	STRAINER, OIL	1	1	1			
11	90501-18576	SPRING, COMPRESSION	1	1	1			
12	30X-15351-00	PLUG, DRAIN	1	1	1			
13	93210-35520	O-RING	1	1	1			
14	1UY-13440-02	ELEMENT ASSY, OIL CLEANER	1	1	1			
15	4KB-13447-00	COVER, OIL ELEMENT	1	1	1			
16	1YW-13497-00	PLUG	1	1	1			
17	90501-082E3	SPRING, COMPRESSION	1	1	1			
18	92907-06600	WASHER, PLATE	1	1	1			
19	93420-13073	CIRCLIP	1	1	1			
20	51Y-13132-50	JOINT	2	2	2			
21	90430-14043	GASKET	2	2	2			
22	93210-54452	O-RING	1	1	1			
23	90110-06224	BOLT, HEXAGON SOCKET HEAD	3	3	3			
24	4KB-13171-00	PIPE, DELIVERY 2	1	1	1			
25	90430-08119	GASKET	4	4	4			
26	90401-08038	BOLT, UNION	2	2	2			
27	4KB-13324-00	GEAR, PUMP DRIVE	1	1	1			

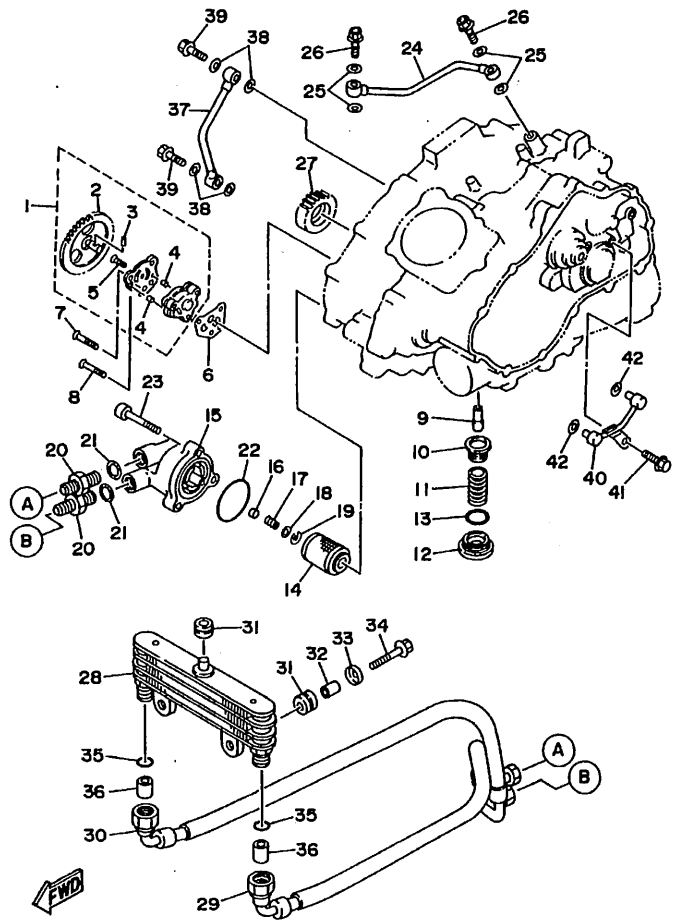

4KB1100-5060

FIG. 6 OIL PUMP

REF. NO.	PART NO.	DESCRIPTION	4WU5	4WU6	4WU7			REMARKS
28	4KB-13470-00	OIL COOLER ASSY	1	1	1			
29	4WU-13464-00	HOSE, OIL 1	1	1	1			
30	4WU-13465-00	HOSE, OIL 2	1	1	1			
31	90480-15235	GROMMET	3	3	3			
32	90387-060A7	COLLAR	2	2	2			
33	90209-06174	WASHER	2	2	2			
34	95807-06020	BOLT, FLANGE	2	2	2			
35	93210-12152	O-RING	2	2	2			
36	93612-16254	PIN, DOWEL	2	2	2			
37	4KB-13161-01	PIPE, DELIVERY 1	1	1	1			
38	90430-08119	GASKET	4	4	4			
39	90401-08117	BOLT, UNION	2	2	2			
40	4KB-13181-00	PIPE, DELIVERY 3	1	1	1			
41	95027-06012	BOLT, FLANGE	1	1	1			
42	93210-06632	O-RING	2	2	2			

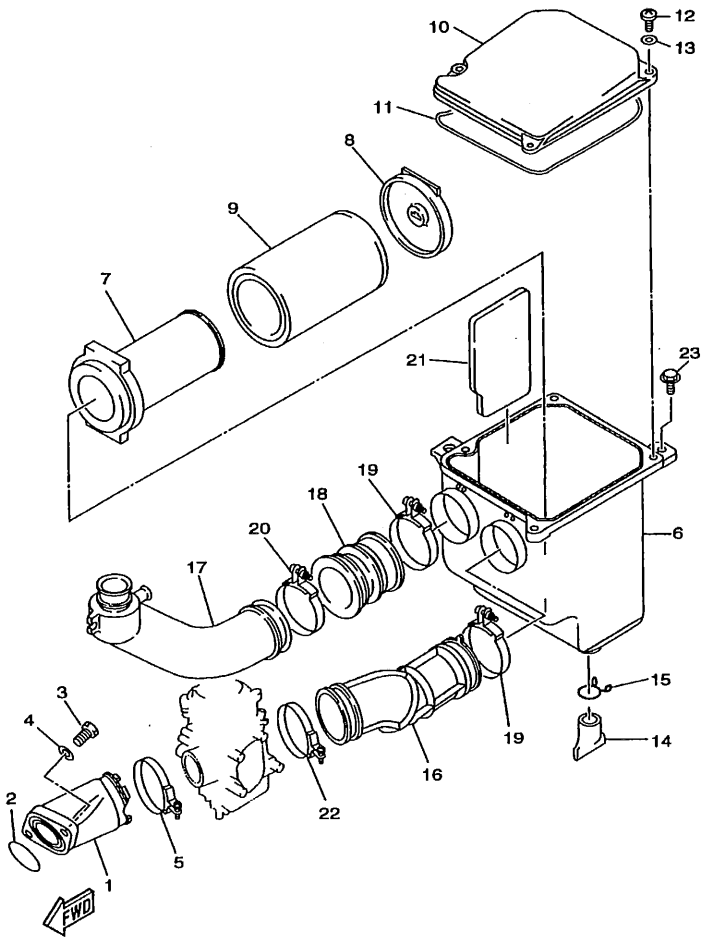

4WU1100-7070

FIG. 7 INTAKE

REF. NO.	PART NO.	DESCRIPTION	4WU5	4WU6	4WU7			REMARKS
1	4WU-13586-00	JOINT, CARBURETOR 1	1	1	1			
2	93210-44545	O-RING	1	1	1			
3	91317-08025	BOLT	2	2	2			
4	90201-08085	WASHER, PLATE	2	2	2			
5	90450-49020	HOSE CLAMP ASSY	1	1	1			
6	1YW-14411-00	CASE, AIR CLEANER 1	1	1	1			
7	1YW-14458-00	GUIDE	1	1	1			
8	1UY-14468-00	PLATE, ELEMENT FITTING	1	1	1			
9	1YW-14451-00	ELEMENT, AIR CLEANER	1	1	1			
10	21V-14412-00	CAP, CLEANER CASE 1	1	1	1			
11	5H0-14452-00	SEAL	1	1	1			
12	98507-05016	SCREW, PAN HEAD	4	4	4			
13	92907-05600	WASHER, PLATE	4	4	4			
14	59V-14457-00	SEAL	1	1	1			
15	90467-22080	CLIP	1	1	1			
16	4WU-14453-00	JOINT, AIR CLEANER 1	1	1	1			
17	2HR-14437-01	DUCT	1	1	1			
18	1AA-14453-00	JOINT, AIR CLEANER 1	1	1	1			
19	90460-56105	CLAMP, HOSE	2	2	2			
20	90460-58124	CLAMP, HOSE	1	1	1			
21	3HN-1442F-00	PROTECTOR	1	1	1			
22	90460-56105	CLAMP, HOSE	1	1	1			
23	90119-06096	BOLT, WITH WASHER	2	2	2			
24	4WU-2179T-00	PLATE, EPA 3(CALIFORNIA)	1					

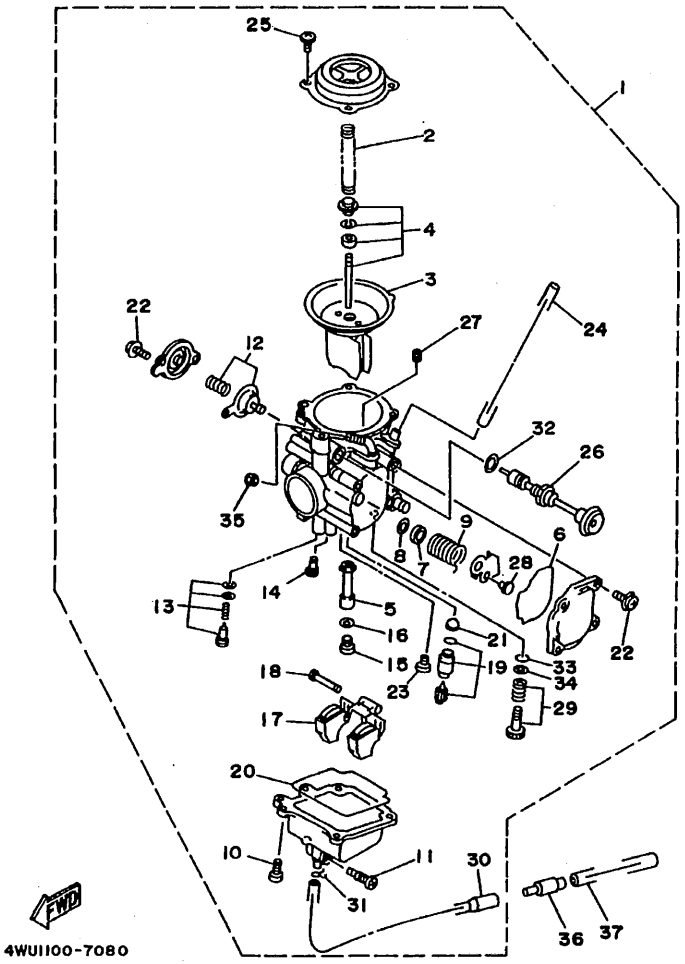

FIG. 8 CARBURETOR

REF. NO.	PART NO.	DESCRIPTION	4WU5	4WU6	4WU7			REMARKS
1	4WU-14901-00	CARBURETOR ASSY 1		1	1			
	4WU-14901-20	CARBURETOR ASSY 1	1					
2	2LN-14933-00	.SPRING, DIAPHRAGM		1	1			
3	4WU-14940-00	.DIAPHRAGM ASSY		1	1			
4	4WU-1490J-00	.NEEDLE SET		1	1			
5	4KB-1414N-40	.NOZZLE, MAIN		1	1			
6	4KB-14147-00	.O-RING		1	1			
7	4KB-14264-00	.COLLAR		1	1			
8	2A2-14997-00	.SEAL		2	2			
9	4KB-14275-00	.SPRING		1	1			
10	98507-04012	.SCREW, PAN HEAD		4	4			
11	12R-14191-00	.PLUG, DRAIN		1	1			
12	26H-1490H-00	.DIAPHRAGM SET 5		1	1			
13	12R-14105-00	.PILOT SCREW SET		1	1			
14	4G0-14142-42	.JET, PILOT (# 42.5)		1	1			
15	620-14231-25	.JET, MAIN (#125)		1	1			
16	137-14153-00	.WASHER, MAIN JET		1	1			
17	2VA-14185-00	.FLOAT		1	1			
18	537-14186-00	.PIN, FLOAT		1	1			
19	1UY-14107-20	.NEEDLE VALVE SET		1	1			
20	2LN-14147-00	.O-RING		1	1			
21	1J7-14994-00	.NET, FILTER		1	1			
22	1UY-14565-00	.SCREW		6	6			
23	2LN-14565-00	.SCREW		1	1			
24	2HR-14197-00	.PIPE		1	1			
25	98507-04008	.SCREW, PAN HEAD		4	4			
26	4KB-14993-00	.PLUNGER, STARTER		1	1			

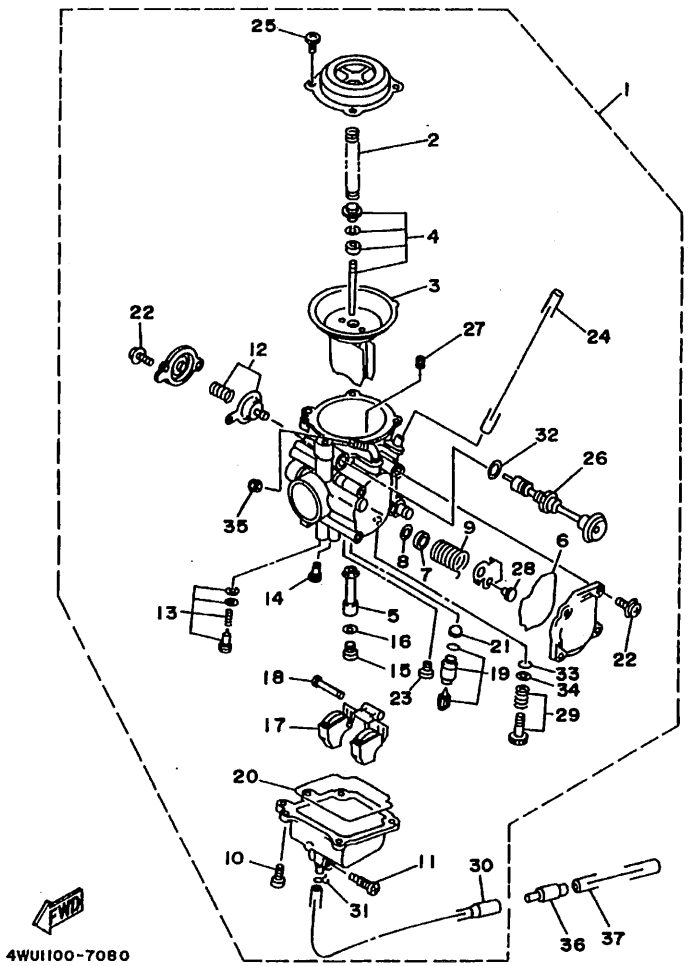

FIG. 8 CARBURETOR

REF. NO.	PART NO.	DESCRIPTION	4WU5	4WU6	4WU7			REMARKS
27	2A2-14172-16	.PILOT JET, AIR (1.6)		1	1			
28	1UY-14155-00	.GUIDE, CABLE		1	1			
29	4KB-14103-00	.THROTTLE SCREW SET		1	1			
30	4KB-14193-20	.PIPE		1	1			
31	14X-14937-00	.CLIP		1	1			
32	4KB-14285-00	.WASHER		1	1			
33	2H0-14147-00	.O-RING		1	1			
34	22U-14952-00	.WASHER		1	1			
35	522-14161-00	.NUT, CABLE ADJUSTING		1	1			
36	24W-14193-00	PIPE	1	1	1			
37	91A20-07010	TUBE, FLEXIBLE VINYL	1	1	1			

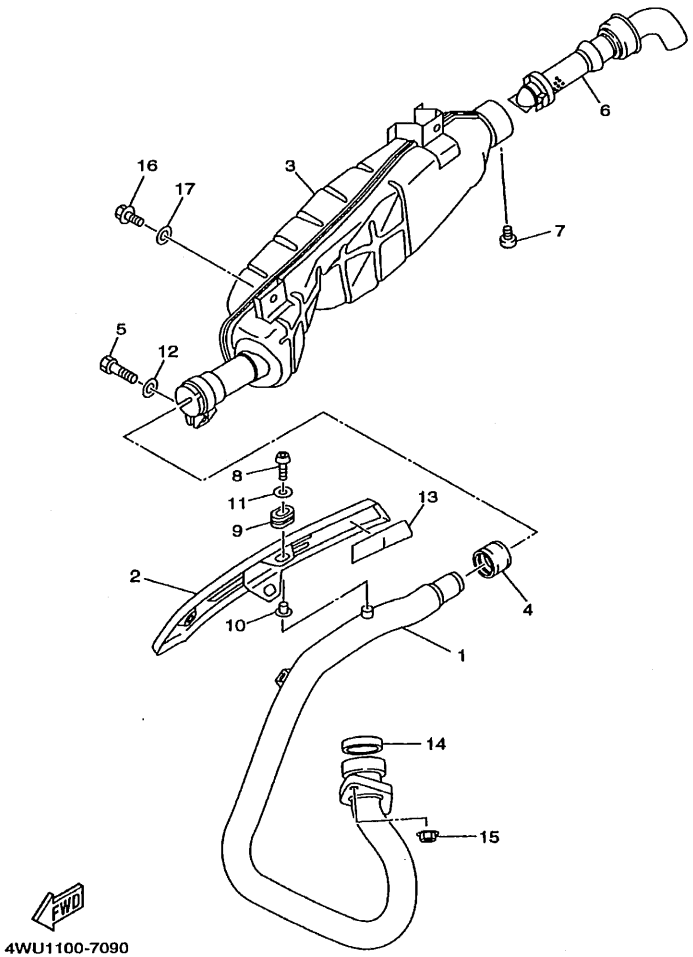

FIG. 9 EXHAUST

REF. NO.	PART NO.	DESCRIPTION	4WU5	4WU6	4WU7			REMARKS
1	4WU-14611-00	PIPE, EXHAUST 1	1	1	1			
2	4KB-14628-00	PROTECTOR, EXHAUST PIPE	1	1	1			
3	2HR-14711-02	MUFFLER 1	1	1	1			
4	3YF-14714-00	GASKET, MUFFLER	1	1	1			
5	97017-08025	BOLT	1	1	1			
6	4SH-14752-00	PIPE, OUTLET	1	1	1			
7	97007-06008	BOLT	1	1	1			
8	92017-06014	BOLT, BUTTON HEAD	3	3	3			
9	90480-01590	GROMMET	3	3	3			
10	90387-062L2	COLLAR	3	3	3			
11	90201-06557	WASHER, PLATE	3	3	3			
12	90201-086J0	WASHER, PLATE	1	1	1			
13	4WU-1465R-00	PLATE, PROTECTOR	1	1	1			
14	3GD-14613-00	GASKET, EXHAUST PIPE	1	1	1			
15	90179-06668	NUT	2	2	2			
16	95817-08016	BOLT, FLANGE	2	2	2			
17	90201-08326	WASHER, PLATE	2	2	2			

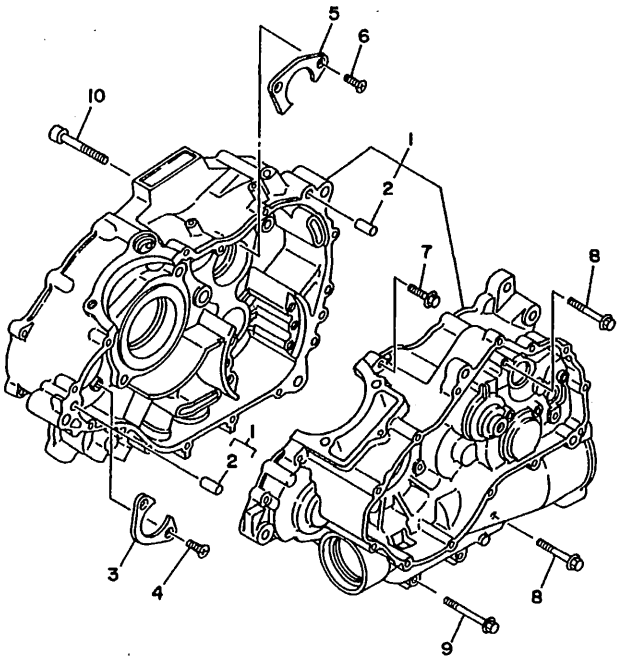

4KB1100-5100

FIG. 10 CRANKCASE

REF. NO.	PART NO.	DESCRIPTION	4WU5	4WU6	4WU7			REMARKS
1	4KB-15100-00	CRANKCASE ASSY	1	1	1			
2	99530-10014	.PIN, DOWEL	2	2	2			
3	1UY-15383-00	PLATE, BEARING COVER	1	1	1			
4	98707-06016	SCREW, FLAT HEAD	2	2	2			
5	4KB-15383-00	PLATE, BEARING COVER	1	1	1			
6	98707-06016	SCREW, FLAT HEAD	2	2	2			
7	95027-06030	BOLT, FLANGE	6	6	6			
8	95027-06050	BOLT, FLANGE	5	5	5			
9	95027-06060	BOLT, FLANGE	2	2	2			
10	90110-08234	BOLT, HEXAGON SOCKET HEAD	3	3	3			

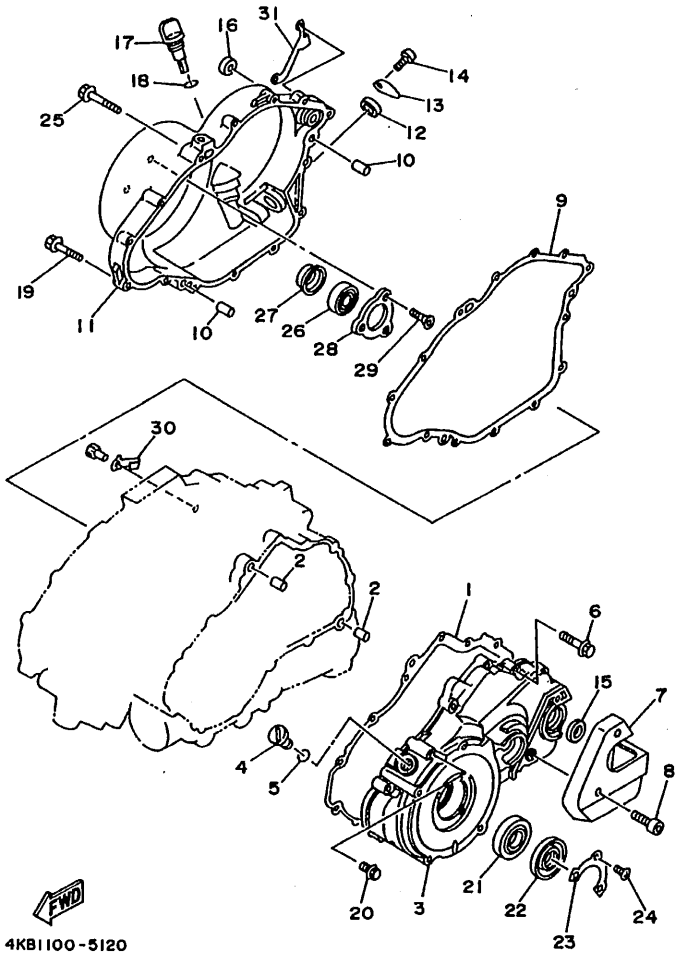

FIG. 11 CRANKCASE COVER 1

REF. NO.	PART NO.	DESCRIPTION	4WU5	4WU6	4WU7			REMARKS
1	4KB-15451-00	GASKET, CRANKCASE COVER 1	1	1	1			
2	99530-10114	PIN, DOWEL	2	2	2			
3	4WU-15411-00	COVER, CRANKCASE 1	1	1	1			
4	90340-14117	PLUG, STRAIGHT SCREW	1	1	1			
5	93210-14369	O-RING	1	1	1			
6	95027-06030	BOLT, FLANGE	13	13	13			
7	4KB-15421-00	COVER, CRANKCASE 2	1	1	1			
8	91317-06025	BOLT	2	2	2			
9	4KB-15462-00	GASKET, CRANKCASE COVER 3	1	1	1			
10	99530-10114	PIN, DOWEL	2	2	2			
11	4WU-15431-00	COVER, CRANKCASE 3	1	1	1			
12	90338-28221	PLUG	1	1	1			
13	4KB-15492-00	COVER	1	1	1			
14	98507-06010	SCREW, PAN HEAD	1	1	1			
15	93102-14209	OIL SEAL	1	1	1			
16	93102-12106	OIL SEAL (SD 12-22-5 HS)	1	1	1			
17	4KB-15362-00	PLUG, OIL LEVEL	1	1	1			
18	93210-19522	O-RING	1	1	1			
19	95027-06030	BOLT, FLANGE	9	9	9			
20	95027-06050	BOLT, FLANGE	3	3	3			
21	93306-07801	BEARING	1	1	1			
22	93102-28476	OIL SEAL	1	1	1			
23	1UY-15719-00	WASHER, THRUST	1	1	1			
24	90151-05023	SCREW, COUNTERSUNK	3	3	3			
25	95027-06040	BOLT, FLANGE	2	2	2			
26	93306-20313	BEARING (B6203C4)	1	1	1			
27	93101-17113	OIL SEAL	1	1	1			

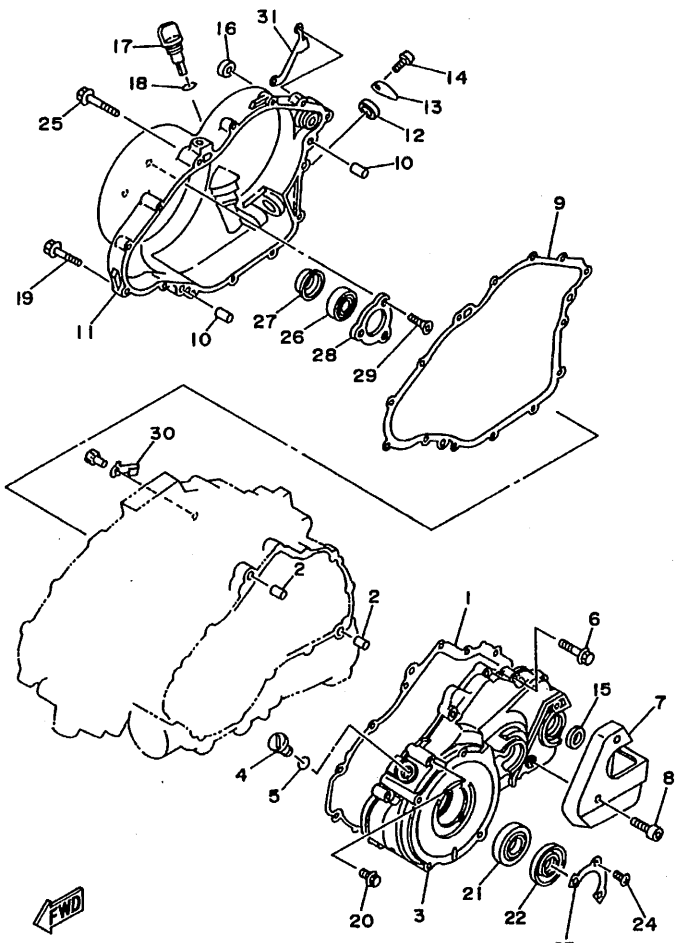

FIG. 11 CRANKCASE COVER 1

REF. NO.	PART NO.	DESCRIPTION	4WU5	4WU6	4WU7			REMARKS
28	4SH-15381-00	PLATE, BEARING COVER	1	1	1			
29	90151-06025	SCREW, COUNTERSUNK	3	3	3			
30	90465-08377	CLAMP	1	1	1			
31	4KB-18128-00	BRACKET	1	1	1			

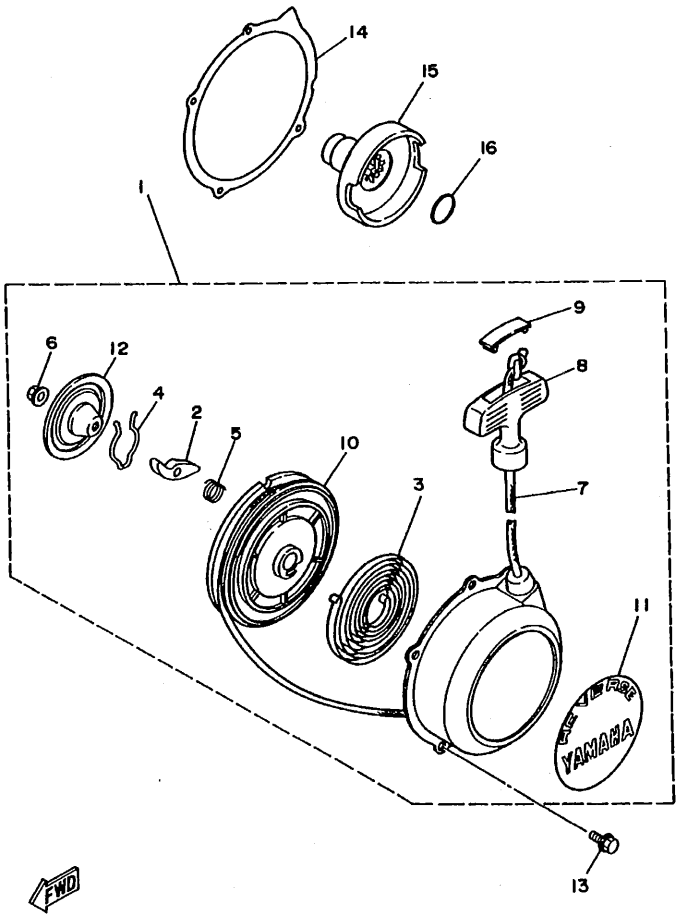

4KB1100-5130

FIG. 12 STARTER

REF. NO.	PART NO.	DESCRIPTION	4WU5	4WU6	4WU7			REMARKS
1	1UY-15710-00	STARTER ASSY	1	1	1			
2	21V-15741-00	.PAWL, DRIVE	1	1	1			
3	21V-15713-00	.SPRING, STARTER	1	1	1			
4	21V-15715-00	.SPRING, FRICTION	1	1	1			
5	21V-15767-00	.SPRING	1	1	1			
6	95702-06100	.NUT, FLANGE	1	1	1			
7	21V-15751-00	.WIRE, STARTER	1	1	1			
8	3X3-15755-00	.HANDLE, STARTER	1	1	1			
9	21V-15779-00	.COVER	1	1	1			
10	24W-15714-00	.DRUM, SHEAVE	1	1	1			
11	1UY-15443-00	.EMBLEM	1	1	1			
12	1UY-15716-00	.PLATE, DRIVE	1	1	1			
13	95027-06012	BOLT, FLANGE	4	4	4			
14	3GD-15699-00	GASKET	1	1	1			
15	1UY-15723-00	PULLEY, STARTER	1	1	1			
16	93210-16290	O-RING	1	1	1			

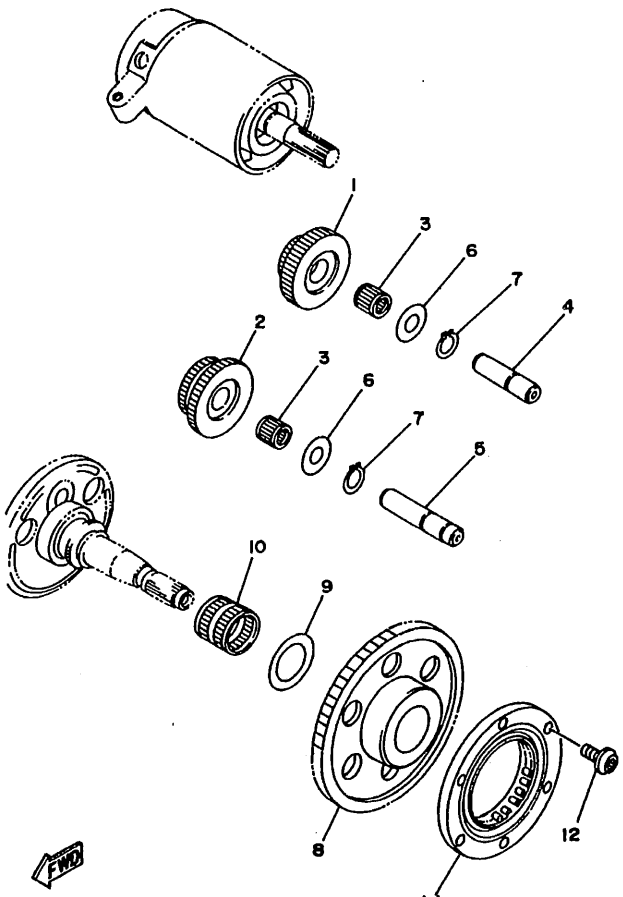

4WU1100-7130

FIG. 13 STARTER CLUTCH

REF. NO.	PART NO.	DESCRIPTION	4WU5	4WU6	4WU7			REMARKS
1	4KB-15512-00	GEAR, IDLER 1	1	1	1			
2	4KB-15517-00	GEAR, IDLER 2	1	1	1			
3	93310-212R6	BEARING	2	2	2			
4	4KB-15521-00	SHAFT 1	1	1	1			
5	4KB-15522-00	SHAFT 2	1	1	1			
6	90201-123K4	WASHER, PLATE	2	2	2			
7	99009-12400	CIRCLIP	2	2	2			
8	1UY-15517-01	GEAR, IDLER 2	1	1	1			
9	90201-25291	WASHER, PLATE	1	1	1			
10	93310-225N0	BEARING	1	1	1			
11	1UY-15590-00	STARTER ONE-WAY ASSY	1	1	1			
12	91317-08016	BOLT	6	6	6			

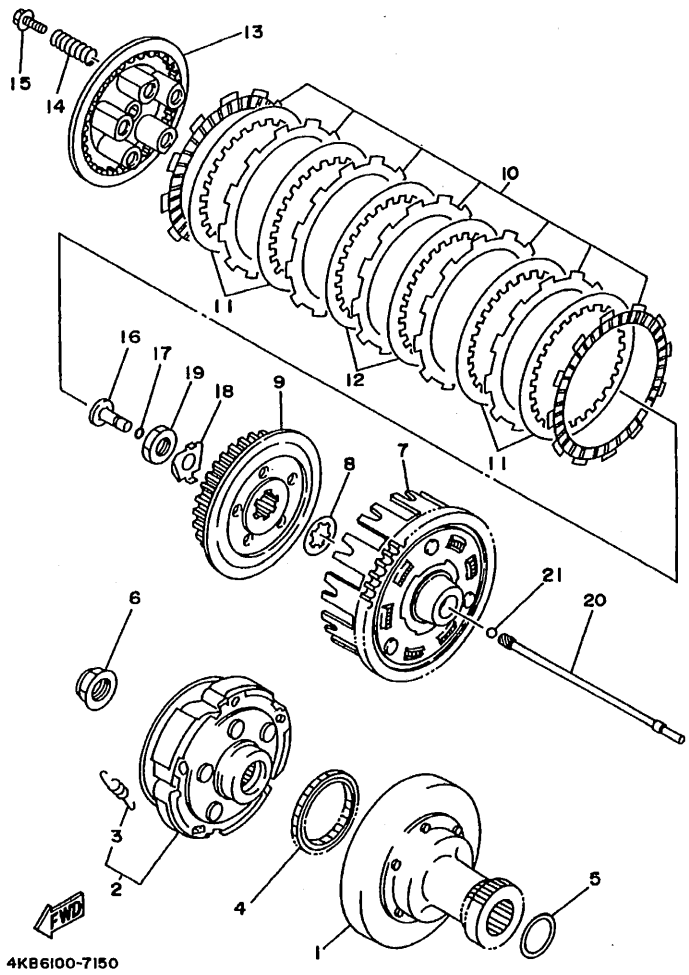

FIG. 14 CLUTCH

REF. NO.	PART NO.	DESCRIPTION	4WU5	4WU6	4WU7			REMARKS
1	4WU-16611-00	CLUTCH HOUSING COMP.	1	1	1			
2	4SH-16620-01	CLUTCH CARRIER ASSY	1	1	1			
3	4SH-16626-00	.SPRING, CLUTCH WEIGHT 1	5	5	5			
4	4SH-16664-00	BEARING, ONE WAY	1	1	1			
5	90201-301P3	WASHER, PLATE	1	1	1			
6	90179-22640	NUT	1	1	1			
7	4KB-16150-00	PRIMARY DRIVEN GEAR COMP.	1	1	1			
8	30X-16154-00	PLATE, THRUST 1	1	1	1			
9	55V-16371-00	BOSS, CLUTCH	1	1	1			
10	5Y1-16331-01	PLATE, FRICTION 2	7	7	7			
11	168-16325-00	PLATE, CLUTCH 2	4	4	4			
12	3J2-16324-00	PLATE, CLUTCH 1	2	2	2			
13	5Y1-16351-00	PLATE, PRESSURE 1	1	1	1			
14	90501-23598	SPRING, COMPRESSION	5	5	5			
15	90159-06010	SCREW, WITH WASHER	5	5	5			
16	4KB-16356-00	ROD, PUSH 1	1	1	1			
17	93210-06422	O-RING	1	1	1			
18	90215-16289	WASHER, LOCK	1	1	1			
19	90170-16326	NUT	1	1	1			
20	4KB-16357-00	ROD, PUSH 2	1	1	1			
21	93511-32017	BALL	1	1	1			

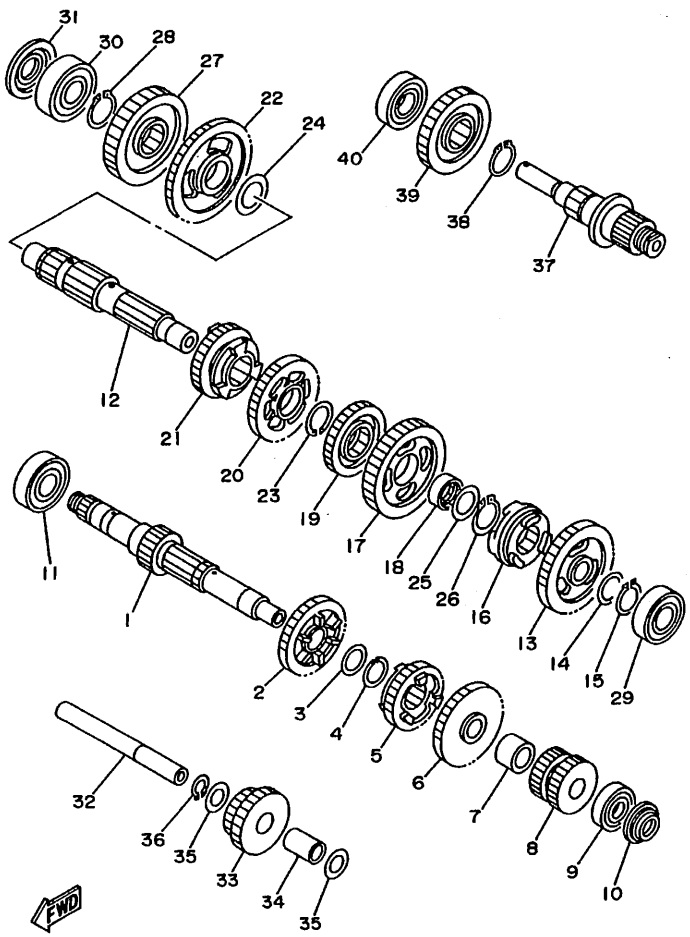

4KB1100-5160

FIG. 15 TRANSMISSION

REF. NO.	PART NO.	DESCRIPTION	4WU5	4WU6	4WU7			REMARKS
1	4KB-17411-00	AXLE, MAIN	1	1	1			
2	4WU-17151-00	GEAR, 5TH PINION	1	1	1			
3	90209-21338	WASHER	1	1	1			
4	93440-24173	CIRCLIP	1	1	1			
5	4KB-17131-00	GEAR, 3RD PINION (22T)	1	1	1			
6	4KB-17141-00	GEAR, 4TH PINION (25T)	1	1	1			
7	90387-1904J	COLLAR	1	1	1			
8	4KB-17121-00	GEAR, 2ND PINION (18T)	1	1	1			
9	93306-20301	BEARING	1	1	1			
10	93104-17094	OIL SEAL	1	1	1			
11	93306-27202	BEARING	1	1	1			
12	4KB-17421-00	AXLE, DRIVE	1	1	1			
13	1YW-17221-00	GEAR, 2ND WHEEL (34T)	1	1	1			
14	90201-20276	WASHER, PLATE (1.0T)	1	1	1			
15	93410-20038	CIRCLIP	1	1	1			
16	4KB-17285-00	CLUTCH, DOG	1	1	1			
17	4KB-17243-00	GEAR, REVERSE WHEEL1 (35T)	1	1	1			
18	90387-2104H	COLLAR	1	1	1			
19	4KB-17241-00	GEAR, 4TH WHEEL (26T)	1	1	1			
20	1YW-17231-01	GEAR, 3RD WHEEL (30T)	1	1	1			
21	4WU-17251-00	GEAR, 5TH WHEEL	1	1	1			
22	4KB-17211-00	GEAR, 1ST WHEEL (38T)	1	1	1			
23	93440-25020	CIRCLIP	1	1	1			
24	90201-266F6	WASHER, PLATE	1	1	1			
25	90209-22191	WASHER	1	1	1			
26	93410-25017	CIRCLIP	1	1	1			
27	4WU-17582-00	GEAR, MIDDLE DRIVE	1	1	1			

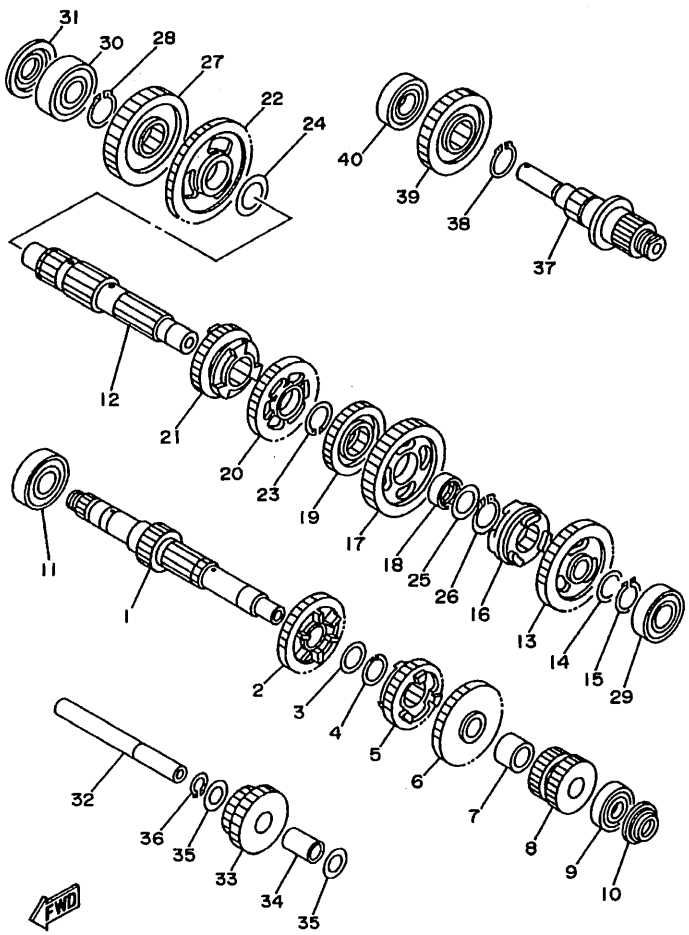

FIG. 15 TRANSMISSION

REF. NO.	PART NO.	DESCRIPTION	4WU5	4WU6	4WU7			REMARKS
28	93410-26067	CIRCLIP	1	1	1			
29	93306-20401	BEARING (B6204)	1	1	1			
30	93306-30424	BEARING (B6304A3)	1	1	1			
31	93104-20068	OIL SEAL	1	1	1			
32	4KB-17432-00	AXLE, IDLE	1	1	1			
33	4KB-17253-00	GEAR, REVERSE WHEEL 2 (22T)	1	1	1			
34	90387-1504G	COLLAR	1	1	1			
35	90201-150U6	WASHER, PLATE	2	2	2			
36	93440-15012	CIRCLIP	1	1	1			
37	4KB-17523-00	SHAFT	1	1	1			
38	93410-26067	CIRCLIP	1	1	1			
39	4WU-17583-00	GEAR, MIDDLE DRIVEN	1	1	1			
40	93306-00426	BEARING	1	1	1			

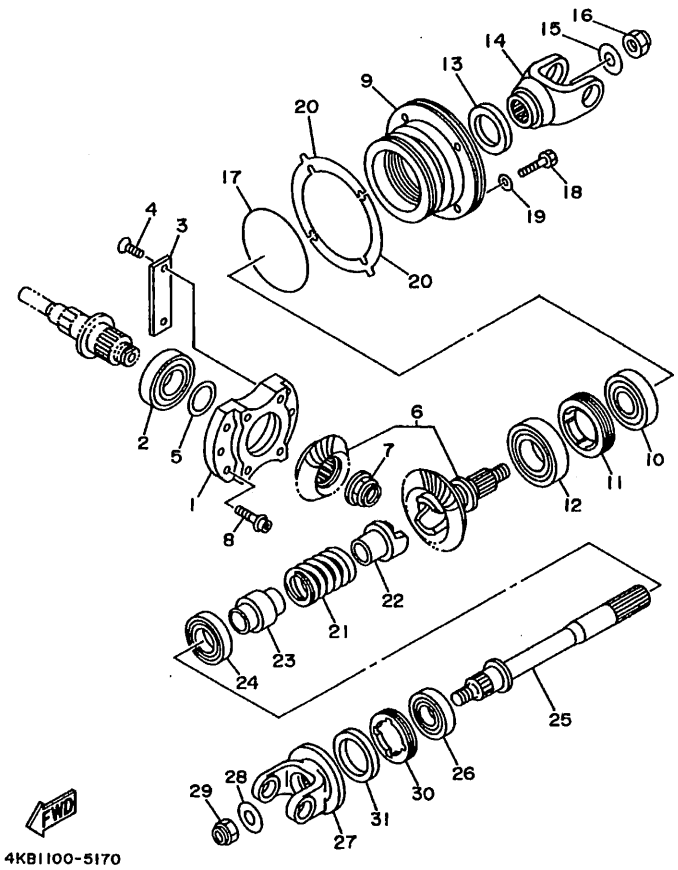

FIG. 16 MIDDLE DRIVE GEAR

REF. NO.	PART NO.	DESCRIPTION	4WU5	4WU6	4WU7			REMARKS
1	4KB-17521-00	HOUSING, BEARING	1	1	1			
2	93306-20636	BEARING	1	1	1			
3	11H-15383-01	PLATE, BEARING COVER	2	2	2			
4	90149-08152	SCREW	4	4	4			
5	52G-17531-01	SHIM, PINION (0.1T)	1	1	1			UR
	52G-17531-11	SHIM, PINION (0.15T)	1	1	1			UR
	52G-17531-21	SHIM, PINION (0.2T)	1	1	1			UR
	52G-17531-31	SHIM, PINION (0.3T)	1	1	1			UR
	52G-17531-41	SHIM, PINION (0.4T)	1	1	1			UR
	52G-17531-51	SHIM, PINION (0.5T)	1	1	1			UR
6	4KB-Y1754-00	MIDDLE GEAR COMP.	1	1	1			
7	90179-22526	NUT	1	1	1			
8	90109-082A1	BOLT	6	6	6			
9	4KB-17551-00	HOUSING, BEARING	1	1	1			
10	93306-30538	BEARING	1	1	1			
11	90179-65305	NUT	1	1	1			
12	93306-20715	BEARING	1	1	1			
13	93101-35097	OIL SEAL	1	1	1			
14	2HR-17556-01	YOKE, JOINT	1	1	1			
15	90201-14633	WASHER, PLATE	1	1	1			
16	90185-14070	NUT, SELF-LOCKING	1	1	1			
17	93210-78544	O-RING	1	1	1			
18	97027-08030	BOLT	4	4	4			
19	92907-08600	WASHER, PLATE	4	4	4			
20	4KB-17531-00	SHIM, PINION	2	2	2			UR
	4KB-17531-10	SHIM, PINION	2	2	2			UR
	4KB-17531-20	SHIM, PINION	2	2	2			UR

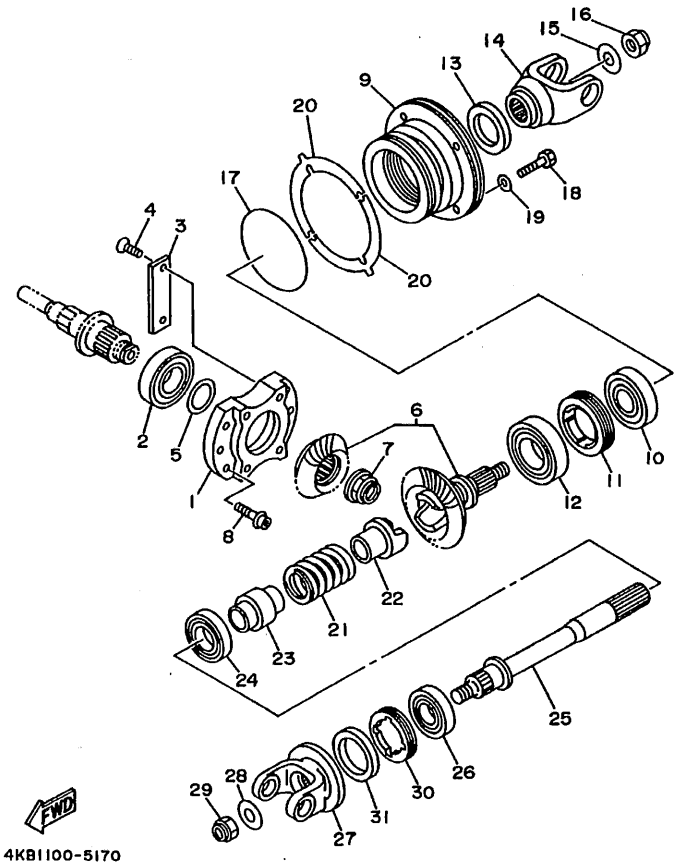

FIG. 16 MIDDLE DRIVE GEAR

REF. NO.	PART NO.	DESCRIPTION	4WU5	4WU6	4WU7			REMARKS
20	4KB-17531-30	SHIM, PINION	2	2	2			UR
	4KB-17531-40	SHIM, PINION	2	2	2			UR
	4KB-17531-50	SHIM, PINION	2	2	2			UR
	4KB-17531-60	SHIM, PINION	2	2	2			UR
21	90501-605E1	SPRING, COMPRESSION	1	1	1			
22	22U-17527-01	CAM, DRIVEN	1	1	1			
23	4KB-46123-00	COUPLING, GEAR	1	1	1			
24	93306-00612	BEARING	1	1	1			
25	4KB-1761A-00	SHAFT, 1	1	1	1			
26	93306-20517	BEARING (B6205)	1	1	1			
27	4KB-17576-00	YOKE,JOINT 2	1	1	1			
28	90201-14633	WASHER, PLATE	1	1	1			
29	90185-14070	NUT, SELF-LOCKING	1	1	1			
30	90179-55660	NUT	1	1	1			
31	93102-44454	OIL SEAL	1	1	1			

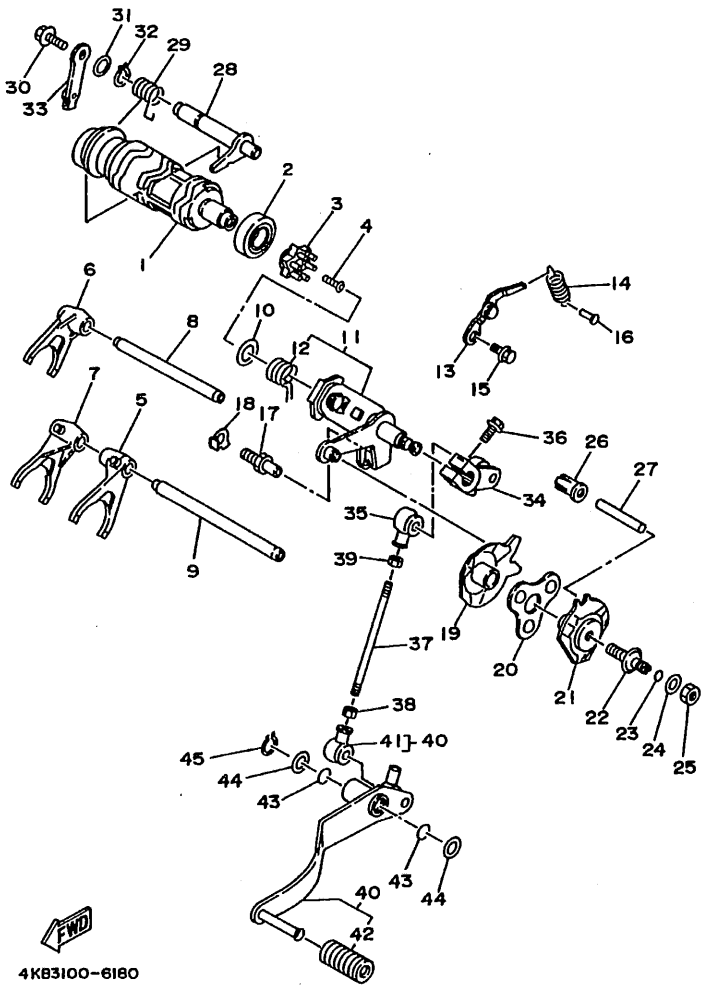

FIG. 17 SHIFT CAM. FORK

REF. NO.	PART NO.	DESCRIPTION	4WU5	4WU6	4WU7			REMARKS
1	4KB-18540-01	SHIFT CAM ASSY	1	1	1			
2	93306-00308	BEARING (B6003)	1	1	1			
3	4KB-18185-00	SEGMENT	1	1	1			
4	90151-06062	SCREW, COUNTERSUNK	1	1	1			
5	4KB-18511-00	FORK, SHIFT 1	1	1	1			
6	4KB-18512-00	FORK, SHIFT 2	1	1	1			
7	4KB-18513-00	FORK, SHIFT 3	1	1	1			
8	4GB-18535-00	BAR, SHIFT FORK GUIDE 2	1	1	1			
9	4KB-18531-00	BAR, SHIFT FORK GUIDE 1	1	1	1			
10	90201-14691	WASHER, PLATE	1	1	1			
11	4KB-18101-00	SHIFT SHAFT ASSY	1	1	1			
12	90508-32711	.SPRING, TORSION	1	1	1			
13	4KB-18140-00	STOPPER LEVER ASSY	1	1	1			
14	90506-12489	SPRING, TENSION	1	1	1			
15	90109-063F7	BOLT	1	1	1			
16	132-16346-00	HOOK, SPRING	1	1	1			
17	4G0-18127-00	STOPPER, SCREW	1	1	1			
18	90215-08260	WASHER, LOCK	1	1	1			
19	4KB-18106-00	GUIDE SHIFT COMP. 2	1	1	1			
20	4KB-18181-00	HOLDER, PAWL	1	1	1			
21	4KB-18104-00	GUIDE SHIFT COMP.	1	1	1			
22	4KB-18127-00	STOPPER, SCREW	1	1	1			
23	93210-07590	O-RING	1	1	1			
24	90201-08093	WASHER, PLATE	1	1	1			
25	95307-08700	NUT	1	1	1			
26	4KB-18424-00	CLIP	1	1	1			
27	93608-50149	PIN, DOWEL	1	1	1			

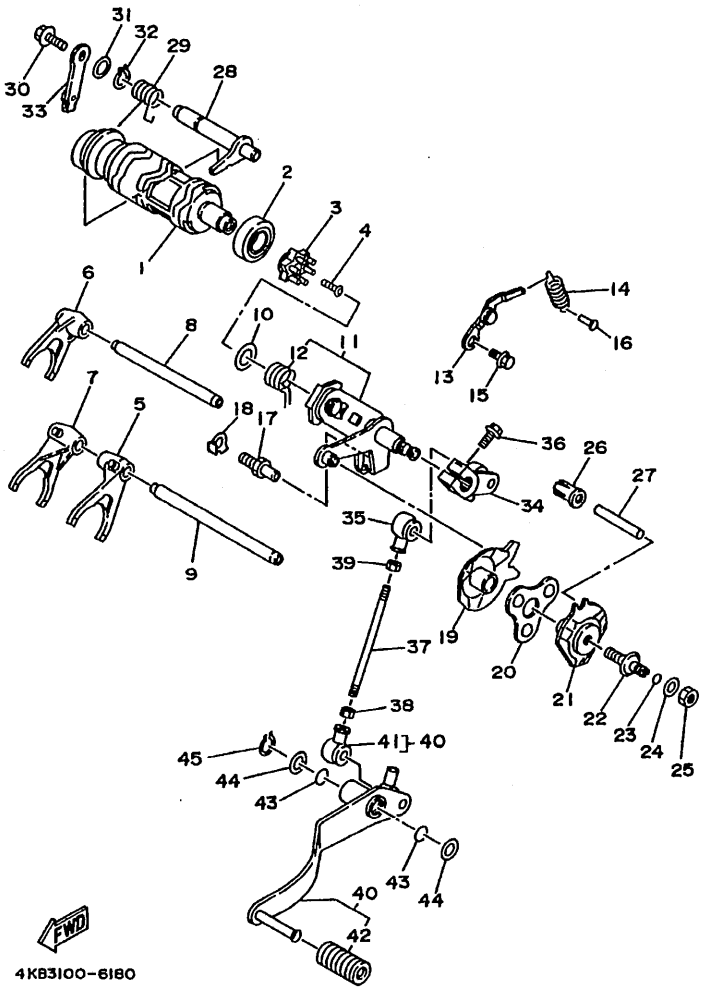

FIG. 17 SHIFT CAM. FORK

REF. NO.	PART NO.	DESCRIPTION	4WU5	4WU6	4WU7			REMARKS
28	4KB-18380-00	SHIFTER BRKT. ASSY	1	1	1			
29	90508-186A5	SPRING, TORSION	1	1	1			
30	95817-06012	BOLT, FLANGE	1	1	1			
31	90201-12166	WASHER, PLATE	1	1	1			
32	99009-12400	CIRCLIP	1	1	1			
33	4KB-18431-00	BRACKET, SHIFTER	1	1	1			
34	4KB-18112-00	ARM, SHIFT	1	1	1			
35	2H9-18154-00	COVER, DUST	1	1	1			
36	97017-06020	BOLT	1	1	1			
37	36Y-18115-00	ROD, SHIFT	1	1	1			
38	90170-06228	NUT(COUNTER CLOCKWISE)	1	1	1			
39	95304-06700	NUT	1	1	1			
40	4KB-18110-11	SHIFT PEDAL ASSY	1	1	1			
41	2H9-18154-00	.COVER, DUST	1	1	1			
42	132-18113-01	.COVER, SHIFT PEDAL	1	1	1			
43	93210-15414	O-RING	2	2	2			
44	90201-15797	WASHER, PLATE	2	2	2			
45	93430-12008	CIRCLIP	1	1	1			

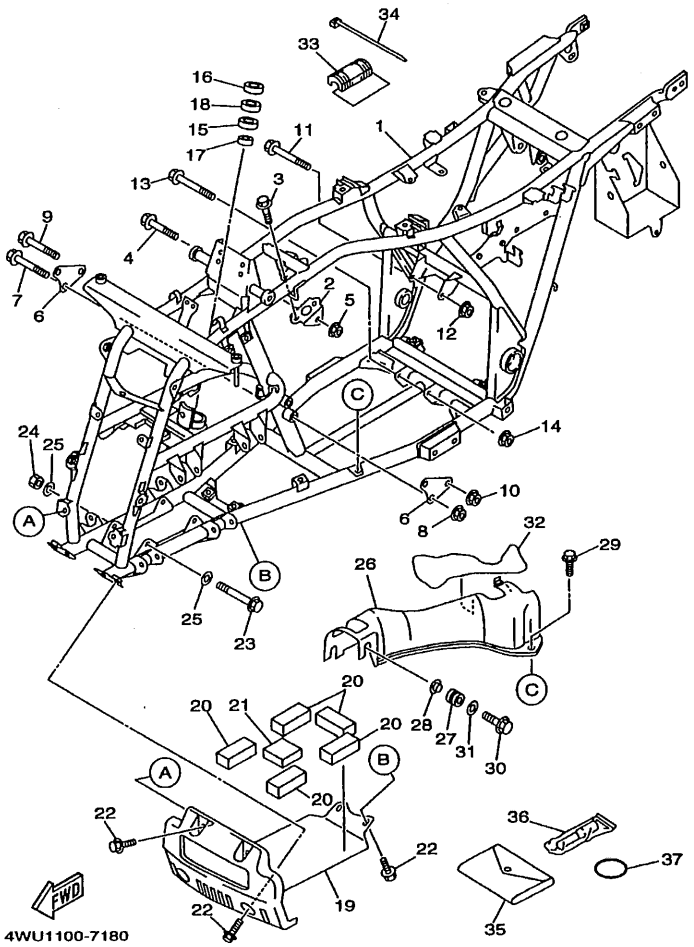

FIG. 18 FRAME

REF. NO.	PART NO.	DESCRIPTION	4WU5	4WU6	4WU7			REMARKS
1	4WU-21110-00	FRAME COMP.	1	1	1			
2	2HR-21315-02	STAY, ENGINE 2	1	1	1			
3	95817-08012	BOLT, FLANGE	2	2	2			
4	95817-08055	BOLT, FLANGE	1	1	1			
5	95617-08200	NUT, SELF-LOCKING	1	1	1			
6	4KB-21316-00	STAY, ENGINE 3	2	2	2			
7	95817-08085	BOLT, FLANGE	2	2	2			
8	95617-08200	NUT, SELF-LOCKING	2	2	2			
9	90105-10454	BOLT, WASHER BASED	1	1	1			
10	95617-10200	NUT, SELF-LOCKING	1	1	1			
11	90105-10747	BOLT, WASHER BASED	1	1	1			
12	95617-10200	NUT, SELF-LOCKING	1	1	1			
13	90105-10747	BOLT, WASHER BASED	1	1	1			
14	95617-10200	NUT, SELF-LOCKING	1	1	1			
15	93306-20331	BEARING	1	1	1			
16	93102-25081	OIL SEAL	1	1	1			
17	93102-25099	OIL SEAL	1	1	1			
18	2GU-23872-00	HOLDER, BEARING	1	1	1			
19	4KB-2147A-00	GUARD, ENGINE 1	1	1	1			
20	41R-21717-00	DAMPER	5	5	5			
21	4KB-21486-00	DAMPER 2	1	1	1			
22	95817-08016	BOLT, FLANGE	6	6	6			
23	90105-10051	BOLT, WASHER BASED	2	2	2			
24	95617-10200	NUT, SELF-LOCKING	2	2	2			
25	90201-101J1	WASHER, PLATE	4	4	4			
26	4KB-2147J-00	COVER, SHAFT 1	1	1	1			
27	90480-15058	GROMMET	2	2	2			

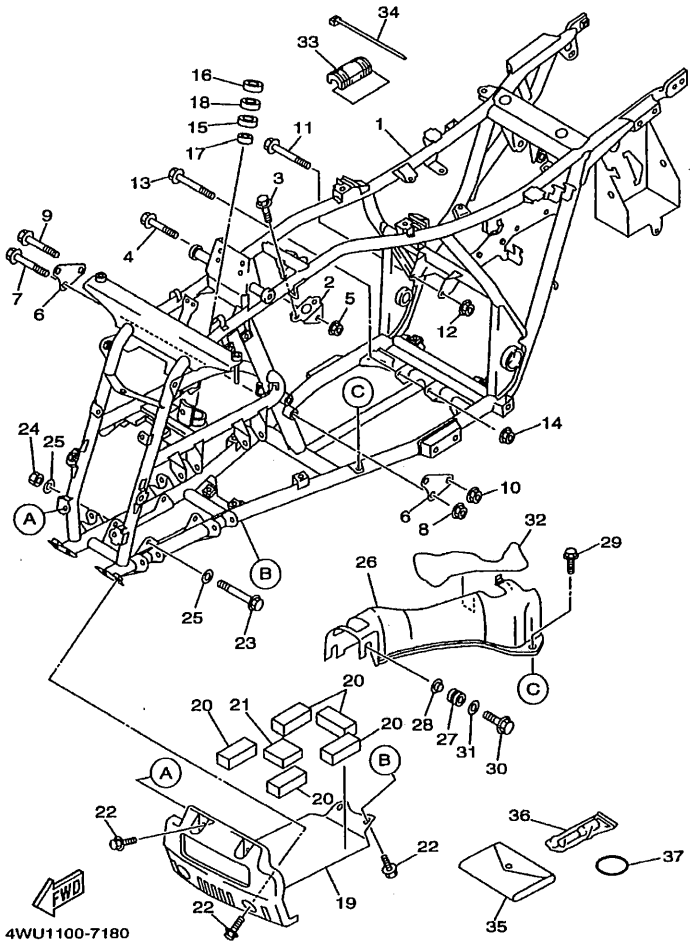

FIG. 18 FRAME

REF. NO.	PART NO.	DESCRIPTION	4WU5	4WU6	4WU7			REMARKS
28	90387-06024	COLLAR	2	2	2			
29	90119-06063	BOLT, WITH WASHER	1	1	1			
30	90105-06738	BOLT, WASHER BASED	2	2	2			
31	90201-06380	WASHER, PLATE	2	2	2			
32	4KB-2117G-01	PROTECTOR	1	1	1			
33	4WU-24181-00	DAMPER, LOCATING 1	2	2	2			
34	1UA-82591-00	BAND	2	2	2			
35	2XK-28100-00	TOOL KIT	1	1	1			
36	1NV-2811A-00	GAUGE, AIR	1	1	1			
37	93210-41041	O-RING	1	1	1			

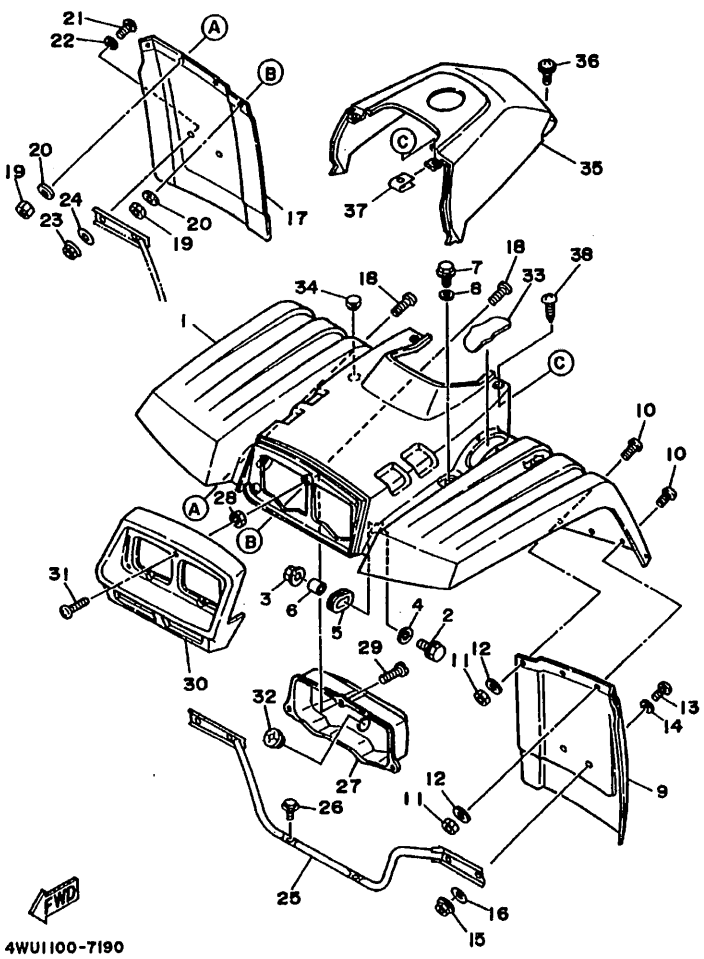

*With label(S) (See Fig.44/45 for detail.)

FIG. 19 FRONT FENDER

REF. NO.	PART NO.	DESCRIPTION	4WU5	4WU6	4WU7			REMARKS
1	3HN-W2151-H0	FRONT FENDER COMP.	1	1				UR RTR *
	3HN-W2151-G1	FRONT FENDER COMP.	1	1				UR PDG *
	3HN-W2151-J0	FRONT FENDER COMP.	1	1				UR DNYS1 *
	3HN-W215C-H0	FRONT FENDER COMP 2			1			UR RTR *
	3HN-W215C-G0	FRONT FENDER COMP 2			1			UR PDG *
	3HN-W215C-J0	FRONT FENDER COMP 2			1			UR DNYS1 *
2	95817-06030	BOLT, FLANGE	2	2	2			
3	95707-06500	NUT, FLANGE	2	2	2			
4	90201-06074	WASHER, PLATE	2	2	2			
5	90480-01400	GROMMET	2	2	2			
6	90387-06299	COLLAR	2	2	2			
7	95807-08020	BOLT, FLANGE	2	2	2			
8	90201-08612	WASHER, PLATE	2	2	2			
9	2HR-21521-00	FLAP, FRONT FENDER	1	1	1			
10	90154-05005	SCREW, BINDING	4	4	4			
11	95707-05300	NUT, FLANGE	4	4	4			
12	90201-05029	WASHER, PLATE	4	4	4			
13	90154-05005	SCREW, BINDING	2	2	2			
14	90201-06071	WASHER, PLATE	2	2	2			
15	95707-05300	NUT, FLANGE	2	2	2			
16	90201-05029	WASHER, PLATE	2	2	2			
17	2HR-21561-00	FLAP 2	1	1	1			
18	90154-05005	SCREW, BINDING	4	4	4			
19	95707-05300	NUT, FLANGE	4	4	4			
20	90201-05029	WASHER, PLATE	4	4	4			
21	90154-05005	SCREW, BINDING	2	2	2			
22	90201-06071	WASHER, PLATE	2	2	2			

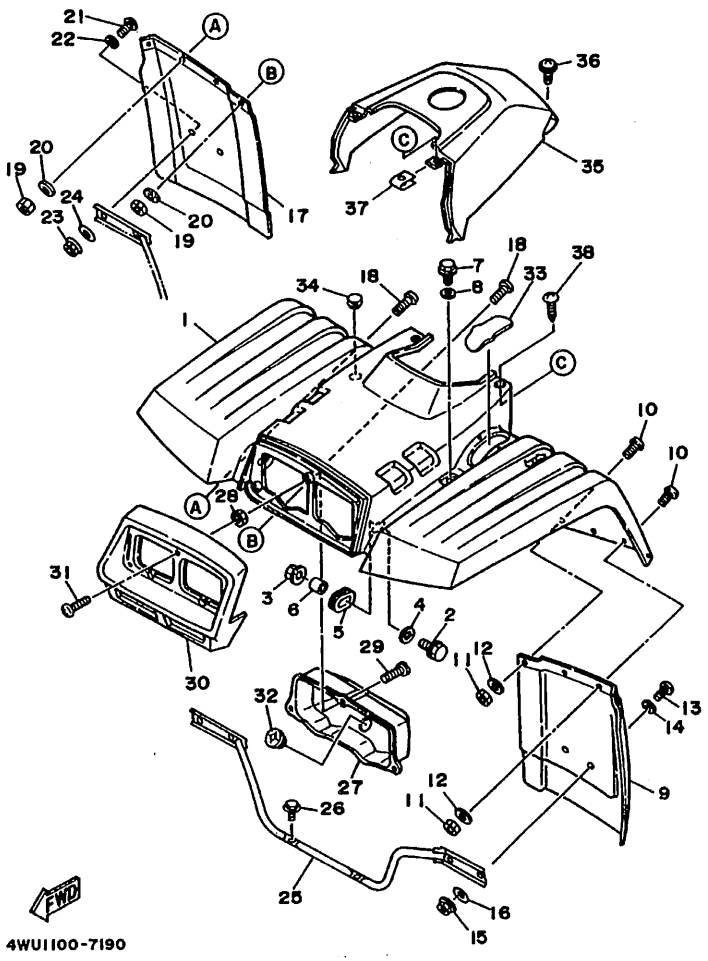

*With label(S) (See Fig.44/45 for detail.)

FIG. 19 FRONT FENDER

REF. NO.	PART NO.	DESCRIPTION	4WU5	4WU6	4WU7			REMARKS
23	95707-05300	NUT, FLANGE	2	2	2			
24	90201-05029	WASHER, PLATE	2	2	2			
25	4WU-21513-00	STAY, FENDER 1	1	1	1			
26	95817-06012	BOLT, FLANGE	2	2	2			
27	2HR-84111-00	BODY, HEADLIGHT	1	1	1			
28	90170-05362	NUT	3	3	3			
29	98907-05014	SCREW, BIND	3	3	3			
30	2HR-23391-00	PANEL, FRONT	1	1	1			
31	90154-05013	SCREW, BINDING	3	3	3			
32	90480-25461	GROMMET	1	1	1			
33	4GB-21541-A0	DAMPER 1	1	1	1			UR RTR
	4GB-21541-90	DAMPER 1	1	1	1			UR PDG
	4GB-21541-B0	DAMPER 1	1	1	1			UR DNYS1
34	26H-28349-00	CAP	1	1	1			
35	3HN-W217A-F0	TOPCOVER ASSY	1	1				UR RTR *
	3HN-W217A-E0	TOPCOVER ASSY	1	1				UR PDG *
	3HN-W217A-G0	TOPCOVER ASSY	1	1				UR DNYS1 *
	3HN-W217C-F0	TOP COVER ASSY 2			1			UR RTR *
	3HN-W217C-P0	TOP COVER ASSY 2			1			UR PDG *
	3HN-W217C-G0	TOP COVER ASSY 2			1			UR DNYS1 *
36	90159-06082	SCREW, WITH WASHER	2	2	2			
37	90183-05024	NUT, SPRING	2	2	2			
38	90110-05201	BOLT, HEXAGON SOCKET HEAD	2	2	2			

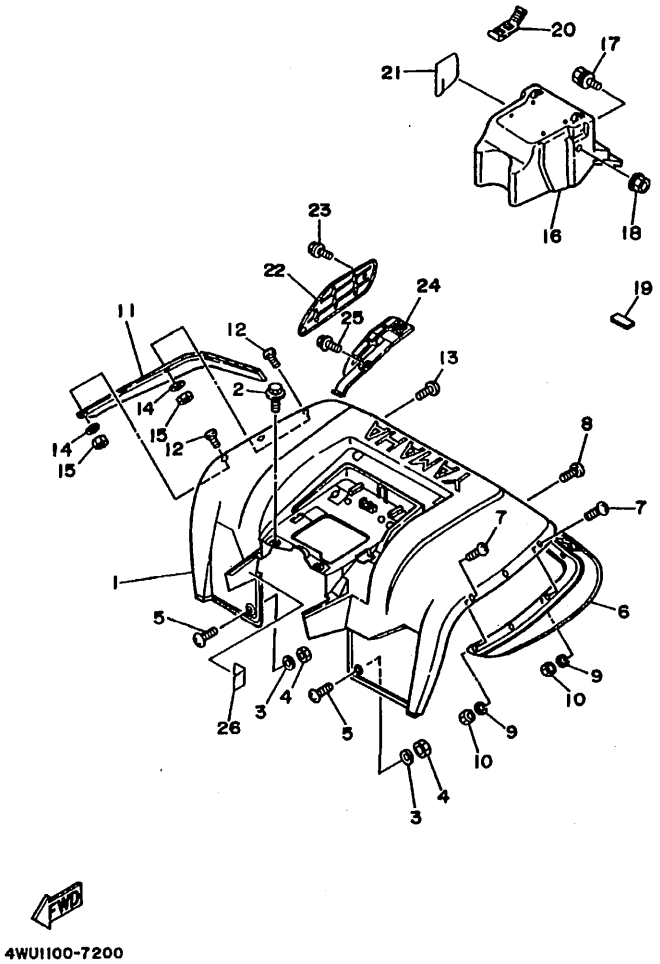

*With label(s) (See Fig.44/45 for detail.)

FIG. 20 REAR FENDER

REF. NO.	PART NO.	DESCRIPTION	4WU5	4WU6	4WU7			REMARKS
1	4UH-W2161-K0	REAR FENDER COMP.	1	1				UR RTR *
	4UH-W2161-JF	REAR FENDER COMP.	1	1				UR PDG *
	4UH-W2161-L0	REAR FENDER COMP.	1	1				UR DNYS1 *
	4UH-W216C-K0	REAR FENDER COMP 2			1			UR RTR *
	4UH-W216C-J0	REAR FENDER COMP 2			1			UR PDG *
	4UH-W216C-L0	REAR FENDER COMP 2			1			UR DNYS1 *
2	90119-06056	BOLT, WITH WASHER	4	4	4			
3	90201-05029	WASHER, PLATE	2	2	2			
4	95707-05300	NUT, FLANGE	2	2	2			
5	90154-05005	SCREW, BINDING	2	2	2			
6	2HR-21621-00	FLAP	1	1	1			
7	90154-05005	SCREW, BINDING	4	4	4			
8	90154-05052	SCREW, BINDING	1	1	1			
9	90201-05029	WASHER, PLATE	5	5	5			
10	95707-05300	NUT, FLANGE	5	5	5			
11	2HR-21691-00	FLAP	1	1	1			
12	90154-05005	SCREW, BINDING	4	4	4			
13	90154-05052	SCREW, BINDING	1	1	1			
14	90201-05029	WASHER, PLATE	5	5	5			
15	95707-05300	NUT, FLANGE	5	5	5			
16	1YW-2160A-00	BOX COMP.	1	1	1			
17	90119-06060	BOLT, WITH WASHER	2	2	2			
18	95607-06200	NUT, SELF U-FLANGE	2	2	2			
19	1YW-21638-00	DAMPER 1	1	1	1			
20	59V-21646-00	BAND	2	2	2			
21	4GB-21652-00	PROTECTOR	1	1	1			
22	2HR-2163E-00	COVER, REAR FENDER 2	1	1	1			

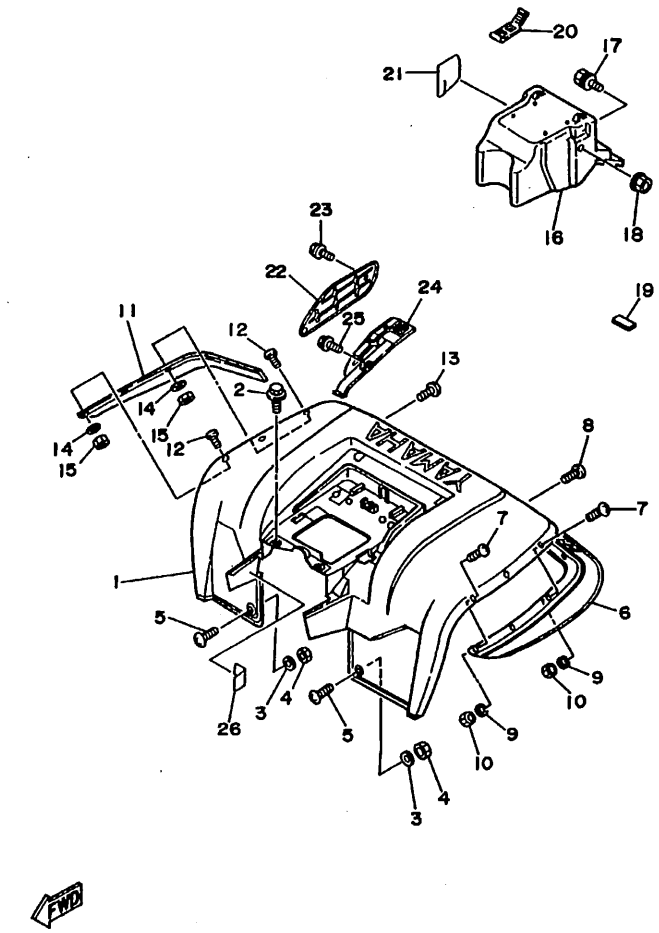

4WU1100-7200

FIG. 20 REAR FENDER

REF. NO.	PART NO.	DESCRIPTION	4WU5	4WU6	4WU7			REMARKS
23	95807-06010	BOLT, FLANGE	1	1	1			
24	2HR-2163F-00	COVER, REAR FENDER 3	1	1	1			
25	95807-06010	BOLT, FLANGE	2	2	2			
26	1YW-2174A-10	INSULATOR, SIDE COVER	1	1	1			

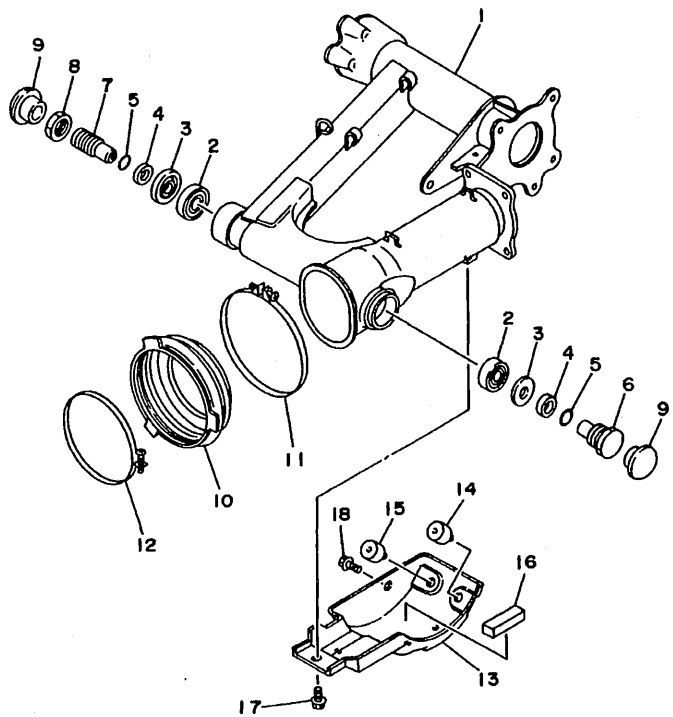

4KB6100-7221

FIG. 21 REAR ARM

REF. NO.	PART NO.	DESCRIPTION	4WU5	4WU6	4WU7			REMARKS
1	4WU-22110-00	REAR ARM COMP.	1	1	1			
2	93332-00080	BEARING	2	2	2			
3	93102-25017	OIL SEAL	2	2	2			
4	90387-1707V	COLLAR	2	2	2			
5	93210-17718	O-RING	2	2	2			
6	4KM-22141-00	SHAFT, PIVOT	1	1	1			
7	29U-22141-00	SHAFT, PIVOT	1	1	1			
8	1J7-22143-00	NUT	1	1	1			
9	90338-34069	PLUG	2	2	2			
10	4KB-22189-00	BOOT, RUBBER	1	1	1			
11	90460-99289	CLAMP, HOSE	1	1	1			
12	4KB-22591-00	CLAMP, HOSE	1	1	1			
13	4BD-2219X-02	COVER	1	1	1			
14	1A0-27114-00	STOPPER, MAIN STAND	2	2	2			
15	109-27114-00	STOPPER, MAIN STAND	1	1	1			
16	1UJ-21638-00	DAMPER 1	1	1	1			
17	95827-08012	BOLT, FLANGE	1	1	1			
18	95827-10016	BOLT, FLANGE	1	1	1			

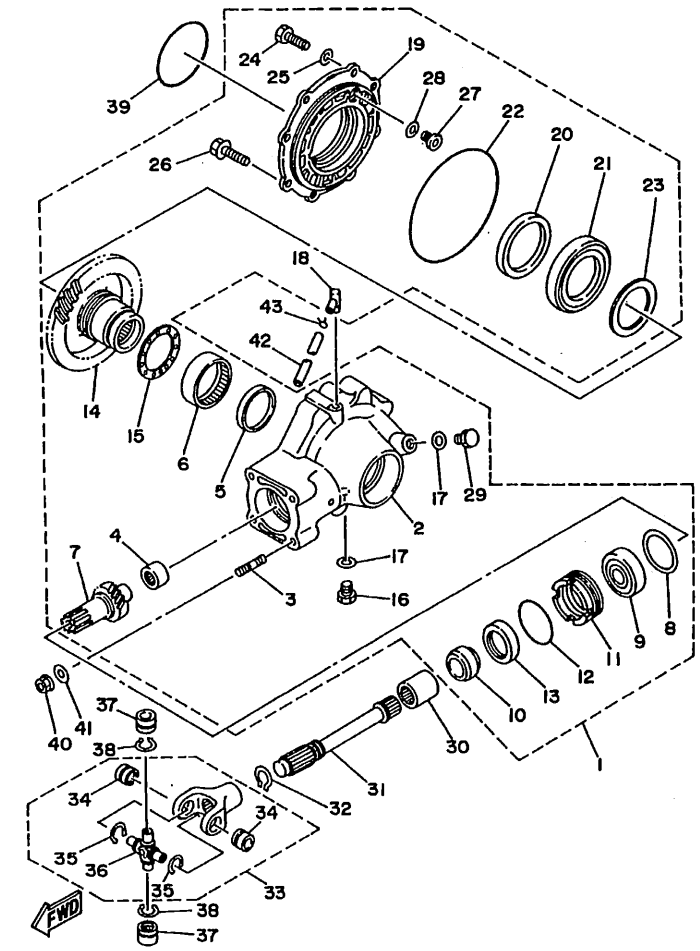

FIG. 22 DRIVE SHAFT

REF. NO.	PART NO.	DESCRIPTION	4WU5	4WU6	4WU7			REMARKS
1	4GB-46101-03	REAR AXLE GEAR CASE ASSY	1	1	1			
2	3HN-46151-00	.HOUSING, DRIVE SHAFT	1	1	1			
3	90116-10593	.BOLT, STUD	4	4	4			
4	2H7-46102-00	.BEARING ASSY	1	1	1			
5	93101-52116	.OIL SEAL	1	1	1			
6	93317-85569	.BEARING	1	1	1			
7	4GB-Y4612-00	.RING GEAR SET	1	1	1			
8	1J7-17537-Y0-30	.SHIM, THRUST (0.30T)	1	1	1			UR
	1J7-17537-Y0-40	.SHIM, THRUST (0.40T)	1	1	1			UR
	1J7-17537-Y0-50	.SHIM, THRUST (0.50T)	1	1	1			UR
9	93306-30568	.BEARING	1	1	1			
10	90387-255H9	.COLLAR	1	1	1			
11	29U-46125-00	.RETAINER, BEARING	1	1	1			
12	93210-59531	.O-RING	1	1	1			
13	93101-38098	.OIL SEAL	1	1	1			
14	24W-46118-00-12	.WASHER, THRUST (1.2T)	1	1	1			UR
	24W-46118-00-14	.WASHER, THRUST (1.4T)	1	1	1			UR
	24W-46118-00-16	.WASHER, THRUST (1.6T)	1	1	1			UR
	24W-46118-00-18	.WASHER, THRUST (1.8T)	1	1	1			UR
	24W-46118-00-20	.WASHER, THRUST (2.0T)	1	1	1			UR
15	90340-14046	.PLUG, STRAIGHT SCREW	1	1	1			
16	214-11198-01	.GASKET	2	2	2			
17	2N4-15371-00	.BREATHER	1	1	1			
18	3HN-46152-01	.HOUSING, BEARING	1	1	1			
19	93102-65386	.OIL SEAL	1	1	1			
20	93316-01301	.BEARING	1	1	1			
21	93211-51749	.O-RING	1	1	1			

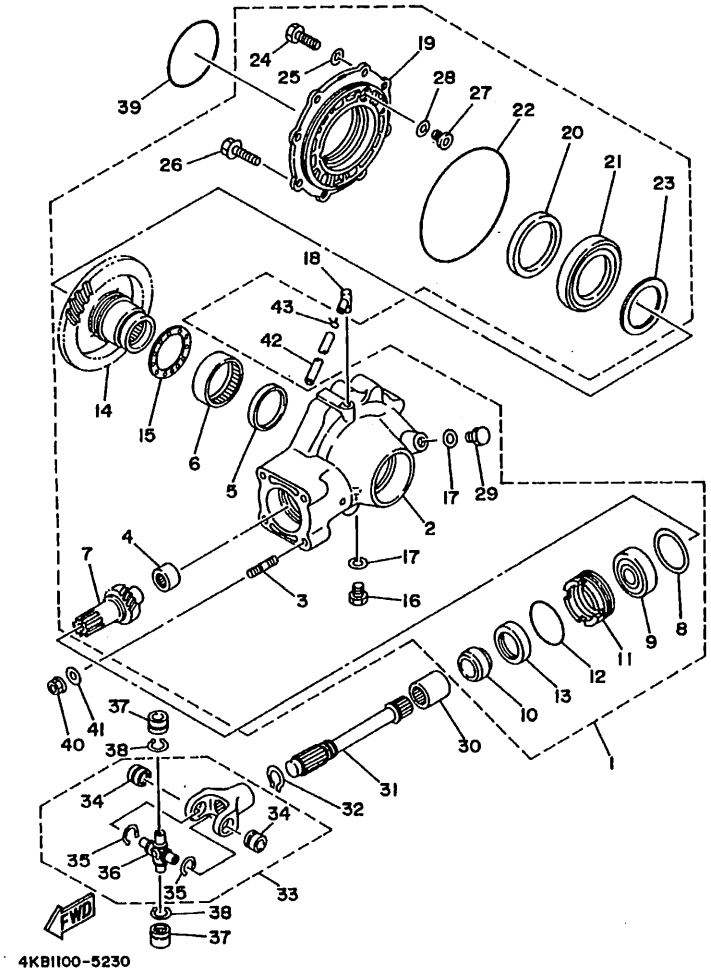

FIG. 22 DRIVE SHAFT

REF. NO.	PART NO.	DESCRIPTION	4WU5	4WU6	4WU7			REMARKS
22	24W-46117-00-25	.SHIM, RING GEAR (0.25T)	1	1	1			UR
	24W-46117-00-30	.SHIM, RING GEAR (0.30T)	1	1	1			UR
	24W-46117-00-40	.SHIM, RING GEAR (0.40T)	1	1	1			UR
	24W-46117-00-50	.SHIM, RING GEAR (0.50T)	1	1	1			UR
23	97027-08025	.BOLT	6	6	6			
24	92907-08600	.WASHER, PLATE	6	6	6			
25	95817-10045	.BOLT, FLANGE	2	2	2			
26	1FK-46156-00	.STOPPER, RING GEAR	1	1	1			
27	1FK-46157-00-15	.SHIM, STOPPER (T=0.15)	1	1	1			UR
	1FK-46157-00-20	.SHIM, STOPPER (T=0.20)	1	1	1			UR
28	90340-14029	.PLUG, STRAIGHT SCREW	1	1	1			
29	2HR-46123-00	COUPLING, GEAR	1	1	1			
30	4KB-46172-00	SHAFT, DRIVE	1	1	1			
31	93410-22039	CIRCLIP	1	1	1			
32	1YW-46180-00	CROSS JOINT COMP.	1	1	1			
33	93399-99923	.BEARING	2	2	2			
34	93430-23046	.CIRCLIP	2	2	2			
35	1YW-46187-00	.SPIDER	1	1	1			
36	93399-99938	BEARING	2	2	2			
37	93440-23165	CIRCLIP	2	2	2			
38	93210-85706	O-RING	1	1	1			
39	90179-10394	NUT	4	4	4			
40	90201-10774	WASHER, PLATE	4	4	4			
41	90445-074F6	HOSE	1	1	1			
42	90467-07029	CLIP	1	1	1			

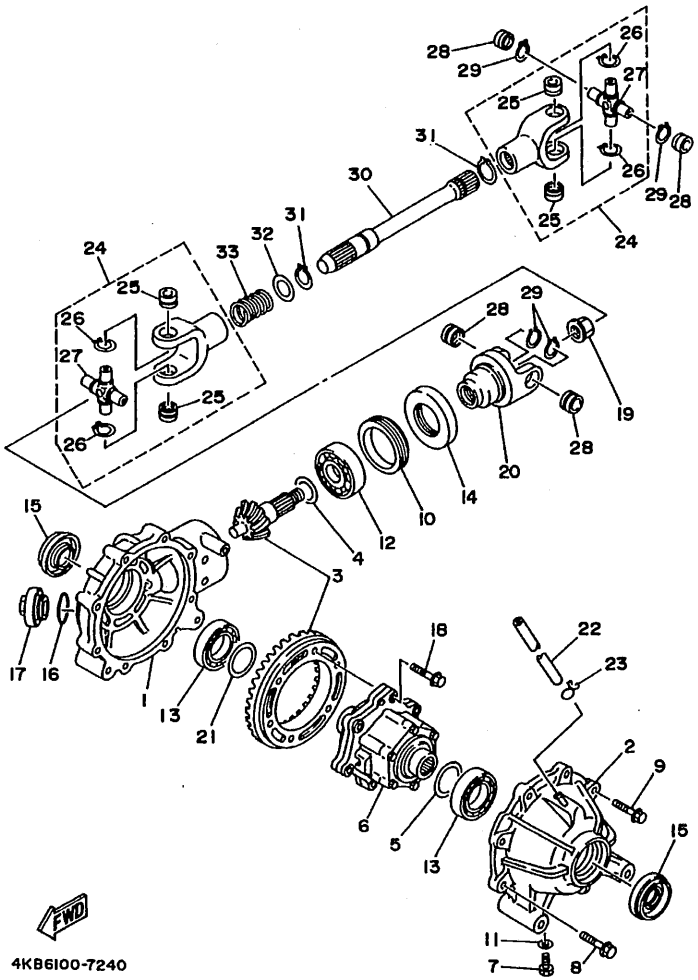

FIG. 23 FRONT DIFFERENTIAL

REF. NO.	PART NO.	DESCRIPTION	4WU5	4WU6	4WU7			REMARKS
1	4KB-46161-00	HOUSING, SHAFT DRIVE 2	1	1	1			
2	4KB-46162-00	HOUSING, BEARING 2	1	1	1			
3	4KB-W4614-10	PINION DRIVE GEAR SET	1	1	1			
4	4KB-46127-00	SHIM, DRIVE PINION (1.82T)	1	1	1			UR
	4KB-46127-10	SHIM, DRIVE PINION (1.88T)	1	1	1			UR
	4KB-46127-20	SHIM, DRIVE PINION (1.94T)	1	1	1			UR
	4KB-46127-30	SHIM, DRIVE PINION (2.00T)	1	1	1			UR
	4KB-46127-40	SHIM, DRIVE PINION (2.06T)	1	1	1			UR
	4KB-46127-50	SHIM, DRIVE PINION (2.12T)	1	1	1			UR
	4KB-46127-60	SHIM, DRIVE PINION (2.18T)	1	1	1			UR
5	4KB-46117-00	SHIM, RING GEAR (0.50T)	1	1	1			UR
	4KB-46117-10	SHIM, RING GEAR (0.55T)	1	1	1			UR
	4KB-46117-20	SHIM, RING GEAR (0.60T)	1	1	1			UR
	4KB-46117-30	SHIM, RING GEAR (0.65T)	1	1	1			UR
	4KB-46117-40	SHIM, RING GEAR (0.70T)	1	1	1			UR
	4KB-46117-50	SHIM, RING GEAR (0.75T)	1	1	1			UR
	4KB-46117-60	SHIM, RING GEAR (0.80T)	1	1	1			UR
	4KB-46117-70	SHIM, RING GEAR (0.85T)	1	1	1			UR
	4KB-46117-80	SHIM, RING GEAR (0.90T)	1	1	1			UR
	4KB-46117-90	SHIM, RING GEAR (0.95T)	1	1	1			UR
	4KB-46117-A0	SHIM, RING GEAR (1.00T)	1	1	1			UR
	4KB-46117-B0	SHIM, RING GEAR (1.05T)	1	1	1			UR
	4KB-46117-C0	SHIM, RING GEAR (1.10T)	1	1	1			UR
	4KB-46117-D0	SHIM, RING GEAR (1.15T)	1	1	1			UR
	4KB-46117-E0	SHIM, RING GEAR (1.20T)	1	1	1			UR
	4KB-46117-F0	SHIM, RING GEAR (1.25T)	1	1	1			UR
	4KB-46117-G0	SHIM, RING GEAR (1.30T)	1	1	1			UR

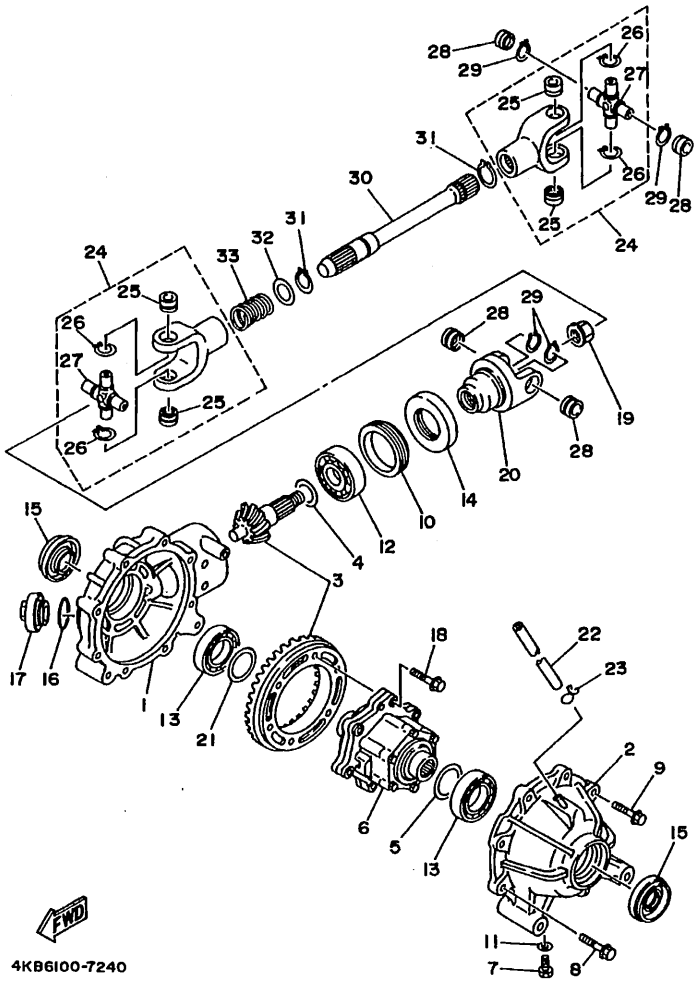

FIG. 23 FRONT DIFFERENTIAL

REF. NO.	PART NO.	DESCRIPTION	4WU5	4WU6	4WU7			REMARKS
5	4KB-46117-H0	SHIM, RING GEAR (1.35T)	1	1	1			UR
	4KB-46117-J0	SHIM, RING GEAR (1.40T)	1	1	1			UR
	4KB-46117-K0	SHIM, RING GEAR (1.45T)	1	1	1			UR
	4KB-46117-L0	SHIM, RING GEAR (1.50T)	1	1	1			UR
	4KB-46117-M0	SHIM, RING GEAR (1.55T)	1	1	1			UR
	4KB-46117-N0	SHIM, RING GEAR (1.60T)	1	1	1			UR
6	4KB-46470-10	LIMITED SLIP DIFF. ASSY	1	1	1			
7	90105-08759	BOLT, WASHER BASED	1	1	1			
8	90105-082A7	BOLT, WASHER BASED	6	6	6			
9	90105-102A8	BOLT, WASHER BASED	2	2	2			
10	90179-60664	NUT	1	1	1			
11	90201-086R7	WASHER, PLATE	1	1	1			
12	93306-37210	BEARING	1	1	1			
13	93306-07804	BEARING	2	2	2			
14	93103-38178	OIL SEAL	1	1	1			
15	93105-22029	OIL SEAL	2	2	2			
16	93210-313A0	O-RING	1	1	1			
17	4KB-11186-00	COVER, CYLINDER HEAD SIDE 2	1	1	1			
18	90105-08756	BOLT, WASHER BASED	6	6	6			
19	90179-16671	NUT	1	1	1			
20	4KB-46146-10	YOKE, JOINT 2	1	1	1			
21	4KB-46119-00	SHIM, THRUST	1	1	1			UR
	4KB-46119-10	SHIM, THRUST	1	1	1			UR
	4KB-46119-20	SHIM, THRUST	1	1	1			UR
	4KB-46119-30	SHIM, THRUST	1	1	1			UR
	4KB-46119-40	SHIM, THRUST	1	1	1			UR
	4KB-46119-50	SHIM, THRUST	1	1	1			UR

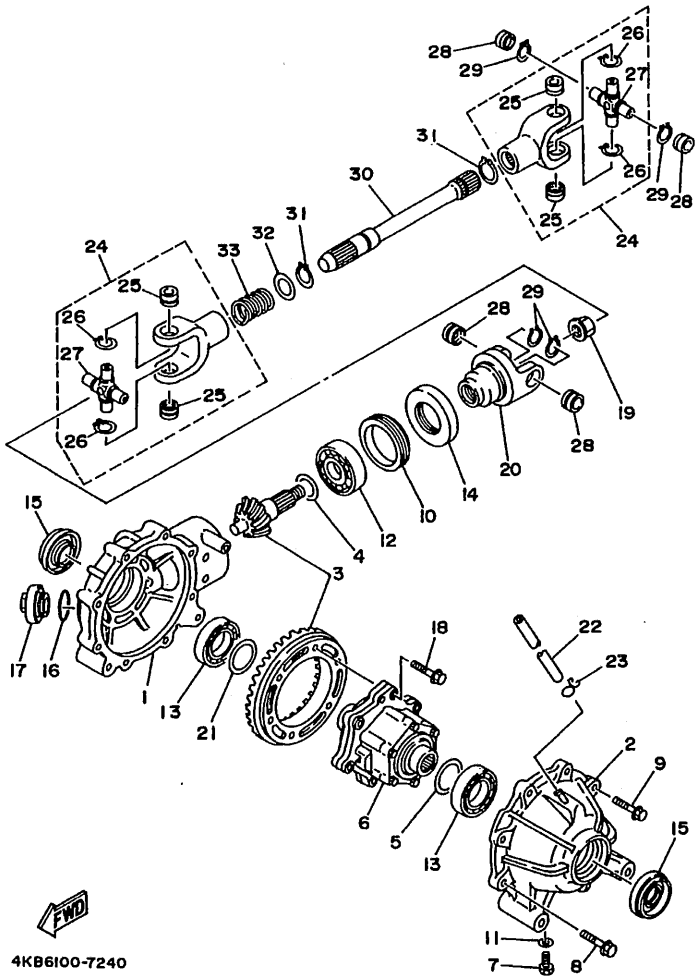

FIG. 23 FRONT DIFFERENTIAL

REF. NO.	PART NO.	DESCRIPTION	4WU5	4WU6	4WU7			REMARKS
21	4KB-46119-60	SHIM, THRUST	1	1	1			UR
	4KB-46119-70	SHIM, THRUST	1	1	1			UR
	4KB-46119-80	SHIM, THRUST	1	1	1			UR
	4KB-46119-90	SHIM, THRUST	1	1	1			UR
	4KB-46119-A0	SHIM, THRUST	1	1	1			UR
	4KB-46119-B0	SHIM, THRUST	1	1	1			UR
	4KB-46119-C0	SHIM, THRUST	1	1	1			UR
	4KB-46119-D0	SHIM, THRUST	1	1	1			UR
	4KB-46119-E0	SHIM, THRUST	1	1	1			UR
	4KB-46119-F0	SHIM, THRUST	1	1	1			UR
	4KB-46119-G0	SHIM, THRUST	1	1	1			UR
	4KB-46119-H0	SHIM, THRUST	1	1	1			UR
	4KB-46119-J0	SHIM, THRUST	1	1	1			UR
	4KB-46119-K0	SHIM, THRUST	1	1	1			UR
	4KB-46119-L0	SHIM, THRUST	1	1	1			UR
	4KB-46119-M0	SHIM, THRUST	1	1	1			UR
	4KB-46119-N0	SHIM, THRUST	1	1	1			UR
22	90445-070J5	HOSE	1	1	1			
23	90467-06016	CLIP	1	1	1			
24	3HN-46108-00	CROSS JOINT COMP. 3	2	2	2			
25	93399-99926	.BEARING	2	2	2			
26	93440-20088	.CIRCLIP	2	2	2			
27	2HR-46187-00	.SPIDER	1	1	1			
28	93399-99926	BEARING	4	4	4			
29	93440-20088	CIRCLIP	4	4	4			
30	4KB-46173-00	SHAFT, DRIVE 2	1	1	1			
31	93410-22039	CIRCLIP	2	2	2			

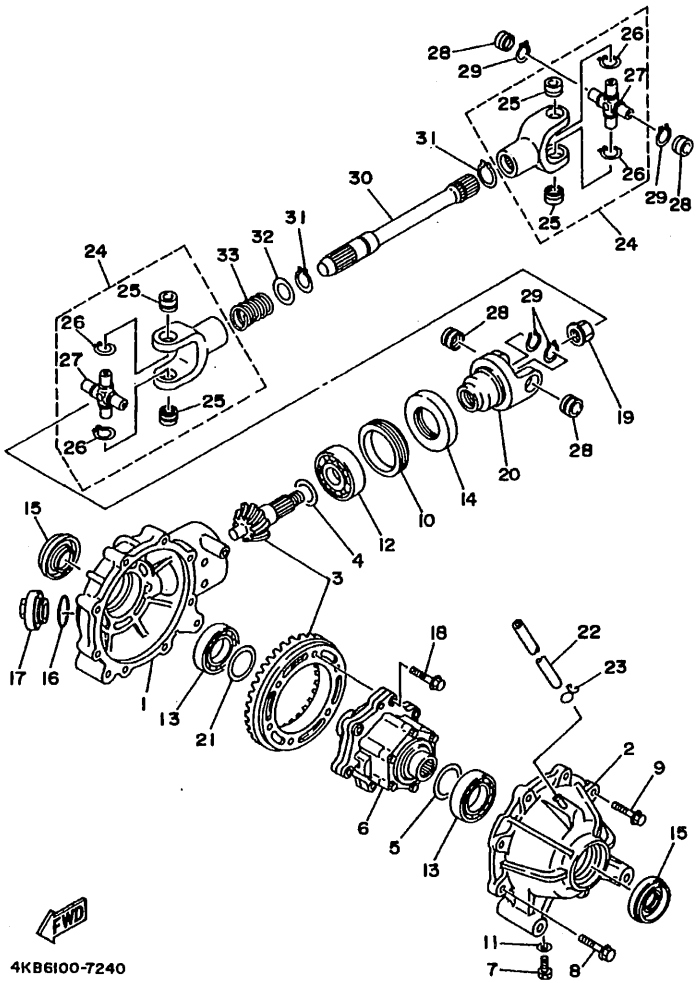

FIG. 23 FRONT DIFFERENTIAL

REF. NO.	PART NO.	DESCRIPTION	4WU5	4WU6	4WU7			REMARKS
32	90201-225M9	WASHER, PLATE	1	1	1			
33	90501-234F8	SPRING, COMPRESSION	1	1	1			

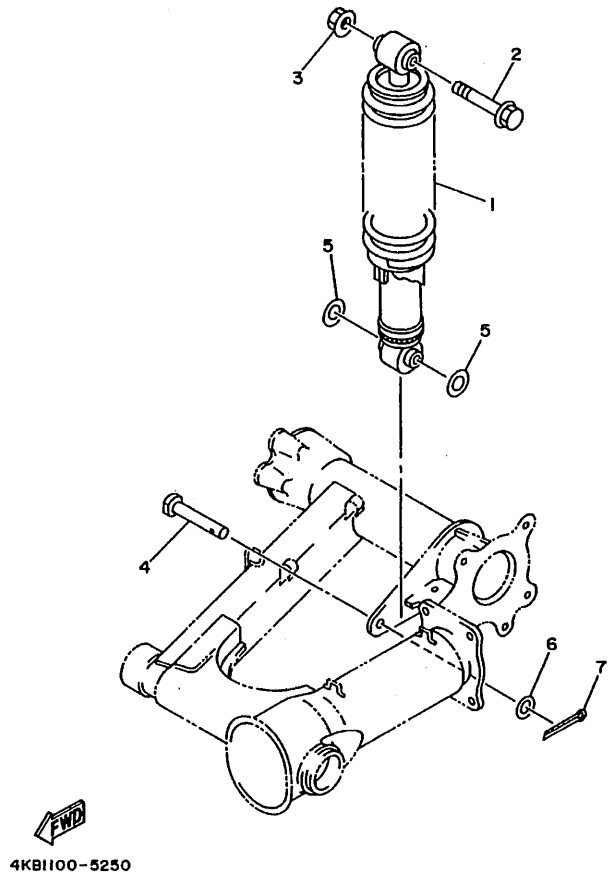

FIG. 24 REAR SUSPENSION

REF. NO.	PART NO.	DESCRIPTION	4WU5	4WU6	4WU7			REMARKS
1	4WU-22210-00	SHOCK ABSORBER ASSY, REAR	1	1	1			
2	90105-12425	BOLT, WASHER BASED	1	1	1			
3	90185-12072	NUT, SELF-LOCKING	1	1	1			
4	90240-12092	PIN, CLEVIS	1	1	1			
5	1W1-22128-00	COVER, THRUST 1	2	2	2			
6	90201-127J6	WASHER, PLATE	1	1	1			
7	90468-20196	CLIP	1	1	1			

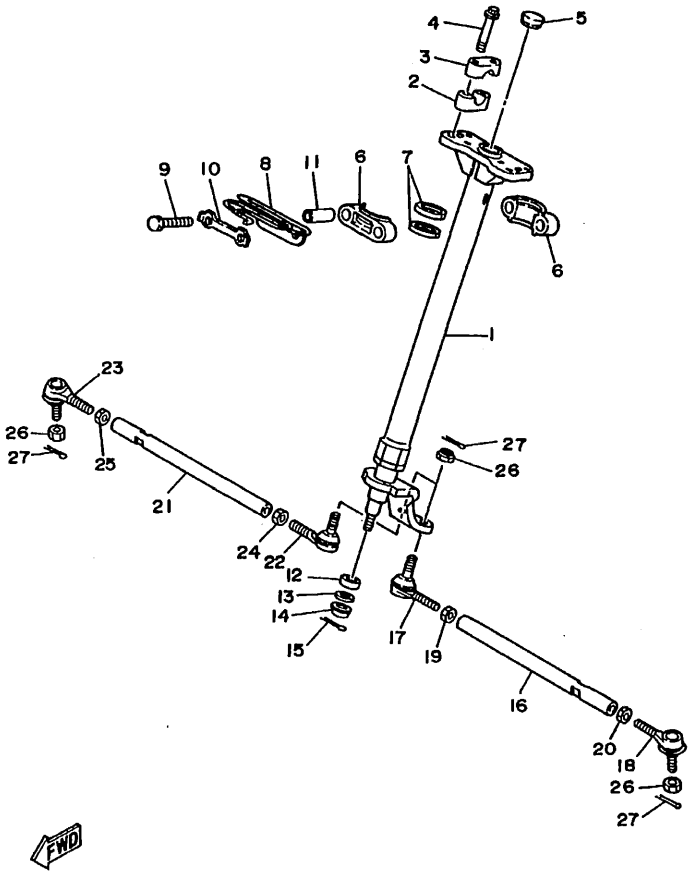

4KB6100-7270

FIG. 25 STEERING

REF. NO.	PART NO.	DESCRIPTION	4WU5	4WU6	4WU7			REMARKS
1	4WU-23813-00	COLUMN, STEERING 2	1	1	1			
2	2HR-23442-00	HOLDER, HANDLE LOWER	2	2	2			
3	8K1-23814-00	HOLDER, HANDLE UPPER	2	2	2			
4	95827-08050	BOLT, FLANGE	4	4	4			
5	90336-28053	PLUG, TAPER	1	1	1			
6	1UY-23812-00	PLANE BEARING, STEERING	2	2	2			
7	93112-31011	OIL SEAL	2	2	2			
8	4BD-23868-00	BRACKET, STEERING LOWER	1	1	1			
9	97027-08060	BOLT	2	2	2			
10	1UY-23894-01	WASHER, LOCK 1	1	1	1			
11	90387-090R0	COLLAR	2	2	2			
12	90387-176R6	COLLAR	1	1	1			
13	90201-10774	WASHER, PLATE	1	1	1			
14	90185-10115	NUT, SELF-LOCKING	1	1	1			
15	91401-20020	PIN, COTTER	1	1	1			
16	2GU-23831-01	ROD, TIE	1	1	1			
17	1UY-23841-01	JOINT, UNIVERSAL 1	1	1	1			
18	1UY-23845-01	JOINT, UNIVERSAL 2	1	1	1			
19	95307-10700	NUT	1	1	1			
20	90170-10186	NUT	1	1	1			
21	2GU-23831-01	ROD, TIE	1	1	1			
22	1UY-23841-01	JOINT, UNIVERSAL 1	1	1	1			
23	1UY-23845-01	JOINT, UNIVERSAL 2	1	1	1			
24	95307-10700	NUT	1	1	1			
25	90170-10186	NUT	1	1	1			
26	90171-10046	NUT, CASTLE	4	4	4			
27	91401-20020	PIN, COTTER	4	4	4			

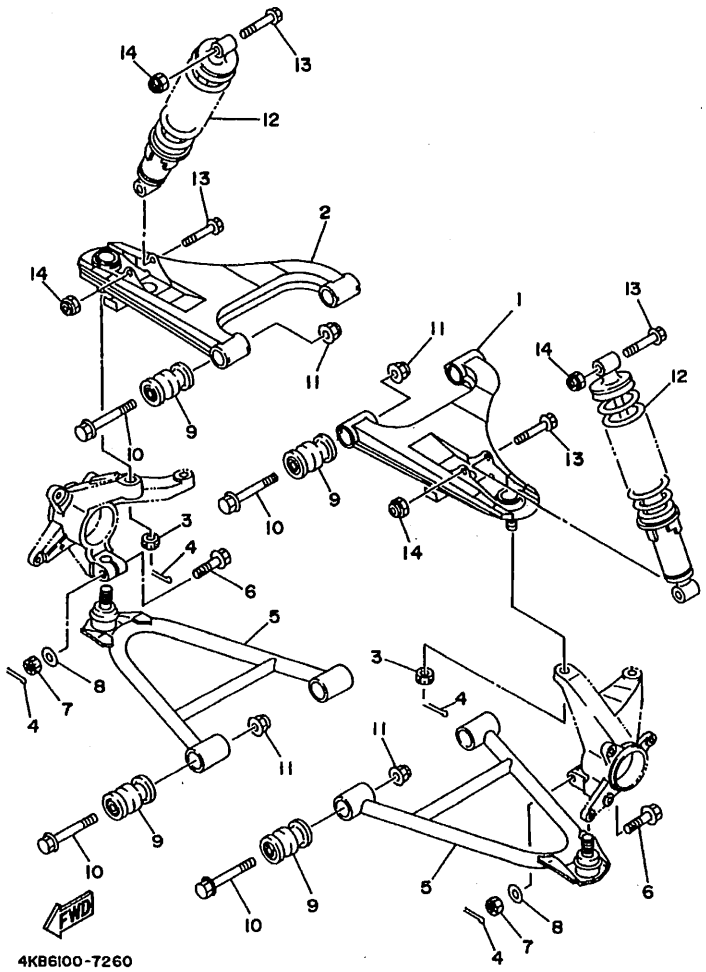

FIG. 26 FRONT SUSPENSION. WHEEL

REF. NO.	PART NO.	DESCRIPTION	4WU5	4WU6	4WU7			REMARKS
1	4WU-23540-00	FRONT UPPER ARM COMP. (LEFT)	1	1	1			
2	4WU-23550-00	FRONT UPPER ARM COMP. (RIGHT)	1	1	1			
3	90171-10046	NUT, CASTLE	2	2	2			
4	91401-20020	PIN, COTTER	4	4	4			
5	4KB-23570-10	FRONT LOWER ARM COMP.	2	2	2			
6	90105-10549	BOLT, WASHER BASED	2	2	2			
7	95337-10600	NUT	2	2	2			
8	90201-10430	WASHER, PLATE	2	2	2			
9	2HR-23526-00	BUSH	8	8	8			
10	90105-10253	BOLT, WASHER BASED	8	8	8			
11	90185-10060	NUT, SELF-LOCKING	8	8	8			
12	4WU-23350-01	SHOCK ABSORBER ASSY	2	2	2			
13	90105-10388	BOLT, WASHER BASED	4	4	4			
14	90185-10060	NUT, SELF-LOCKING	4	4	4			

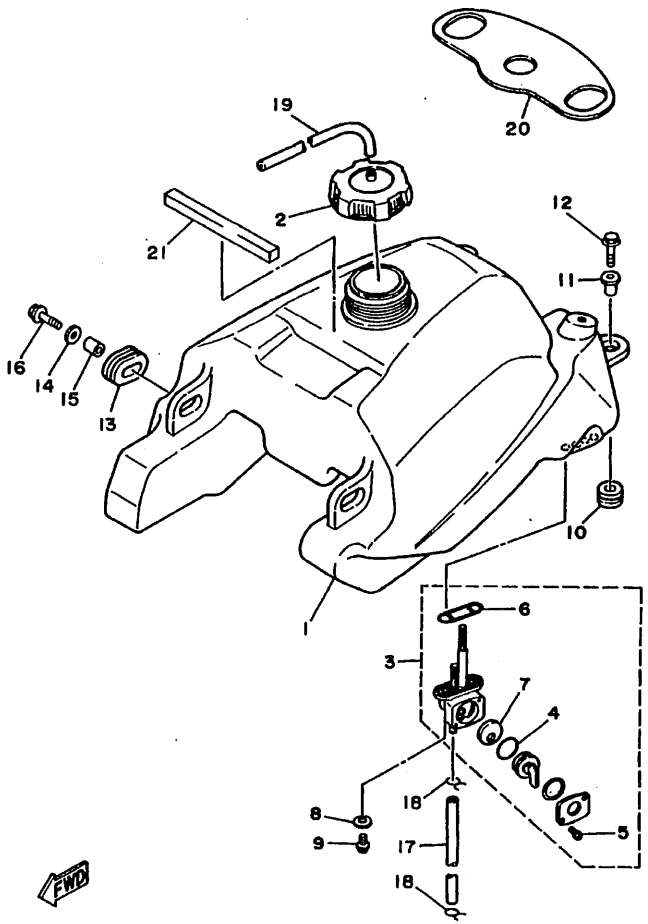

4WU1100-7270

FIG. 27 FUEL TANK

REF. NO.	PART NO.	DESCRIPTION	4WU5	4WU6	4WU7			REMARKS
1	2HR-24110-01	FUEL TANK COMP.	1	1	1			
2	1UY-24610-00	CAP ASSY	1	1	1			
3	2HR-24500-01	FUEL COCK ASSY 1	1	1	1			
4	3AJ-24534-00	.SEAL, COCK	1	1	1			
5	97801-03008	.SCREW, PAN HEAD	2	2	2			
6	4X8-24512-00	.O-RING	1	1	1			
7	3AJ-24523-00	.VALVE PACKING	1	1	1			
8	90202-05193	WASHER, PLATE	2	2	2			
9	90149-06011	SCREW	2	2	2			
10	90480-18290	GROMMET	2	2	2			
11	90387-066J1	COLLAR	2	2	2			
12	95807-06030	BOLT, FLANGE	2	2	2			
13	90480-01400	GROMMET	2	2	2			
14	90201-060L5	WASHER, PLATE	2	2	2			
15	90387-07598	COLLAR	2	2	2			
16	90119-06073	BOLT, WITH WASHER	2	2	2			
17	90445-110F2	HOSE	1	1	1			
18	90467-10008	CLIP	2	2	2			
19	90445-09304	HOSE	1	1	1			
20	2HR-2414H-00	DAMPER, PLATE 1	1	1	1			
21	2HX-24181-00	DAMPER, LOCATING 1	1	1	1			

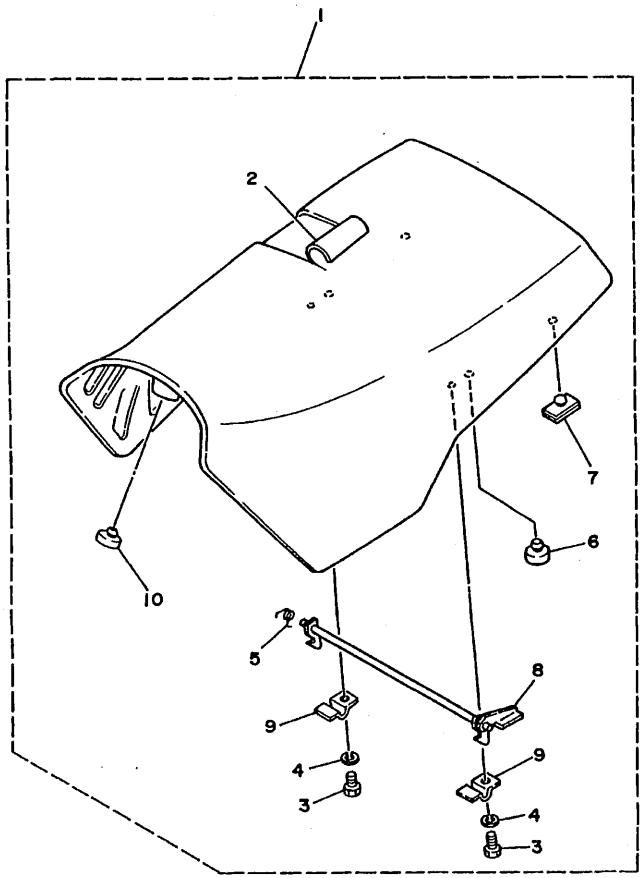

FWD

2HR110-7280

FIG. 28 SEAT

REF. NO.	PART NO.	DESCRIPTION	4WU5	4WU6	4WU7			REMARKS
1	3HN-24710-41	SINGLE SEAT ASSY	1	1	1			BLACK
2	3HN-24731-41	.COVER, SEAT	1	1	1			BLACK
3	97007-06012	.BOLT	2	2	2			
4	92907-06100	.WASHER, SPRING	2	2	2			
5	90508-23567	.SPRING, TORSION	1	1	1			
6	371-27114-00	.STOPPER, MAIN STAND	2	2	2			
7	509-24724-00	.DAMPER, SEAT	2	2	2			
8	59V-24776-01	.LEVER, SEAT	1	1	1			
9	59V-24775-00	.BRACKET, SEAT LEVER	2	2	2			
10	22W-24741-00	.PAD, SEAT	2	2	2			

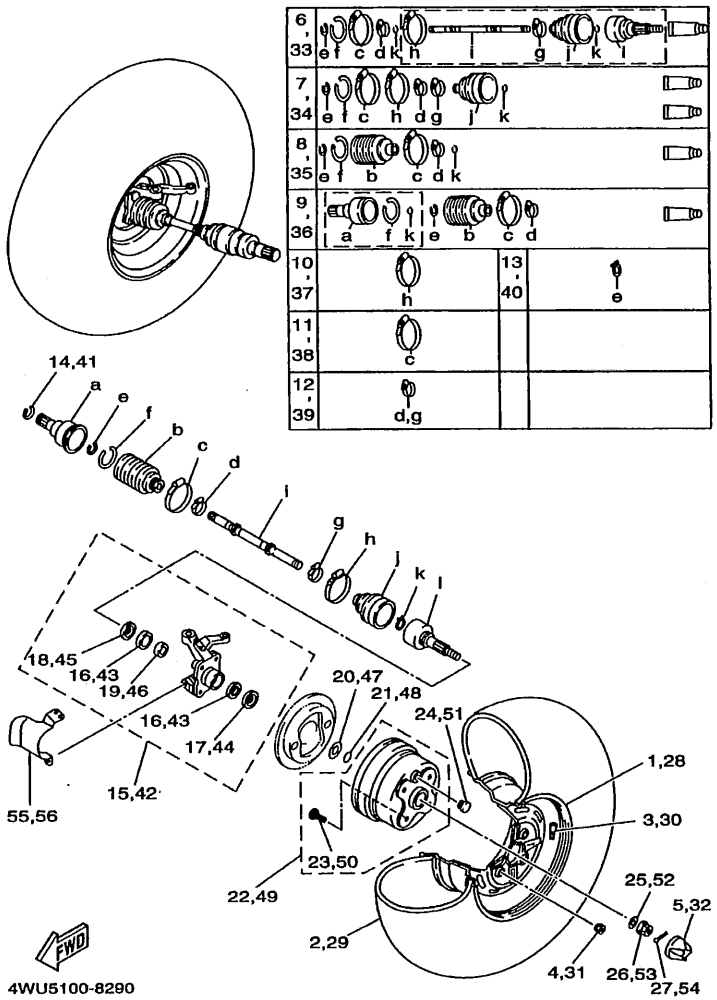

FIG. 29 FRONT WHEEL

REF. NO.	PART NO.	DESCRIPTION	4WU5	4WU6	4WU7			REMARKS
1	3HN-25180-00-33	WHEEL COMP.	1	1	1			YB
2	94108-1210G	TIRE (AT25X8-12 KT404)	1	1	1			
3	93900-00022	VALVE, RIM	1	1	1			TAIHEIYO
4	90179-10540	NUT	4	4	4			
5	52H-2512A-00	CAP, WHEEL	1	1	1			
6	4KB-2510F-00	BALL JOINT SET	1	1	1			
7	4KB-2510G-00	BOOT SET (BALL JOINT)	1	1	1			
8	4KB-2510H-00	BOOT SET (DOUBLE OFFSET JOINT)	1	1	1			
9	4KB-2510J-00	DOUBLE OFF SET JOINT	1	1	1			
10	3HN-2511G-01	BOOT BAND (BALL JOINT)	1	1	1			
11	4KB-2511H-00	BOOT BAND (DOUBLE OFFSET JOINT	1	1	1			
12	3HN-2512G-01	BOOT BAND (SMALL)	2	2	2			
13	2HR-2512J-00	SNAP RING	1	1	1			
14	4KB-2512H-00	CIRCLIP	1	1	1			
15	3HN-23501-01	STEERING, KNUCKLE ASSY (LEFT)	1	1	1			
16	93306-00612	.BEARING	2	2	2			
17	93102-38383	.OIL SEAL	1	1	1			
18	93102-38417	.OIL SEAL	1	1	1			
19	90560-30325	.SPACER	1	1	1			
20	90387-281V8	COLLAR	1	1	1			
21	93210-26606	O-RING	1	1	1			
22	3HN-25111-02	HUB, FRONT	1	1	1			
23	90114-10012	.BOLT, SERRATION	4	4	4			
24	2NL-25335-01	CAP	1	1	1			
25	90201-163M0	WASHER, PLATE	1	1	1			
26	90171-16048	NUT, CASTLE	1	1	1			
27	91401-30030	PIN, COTTER	1	1	1			

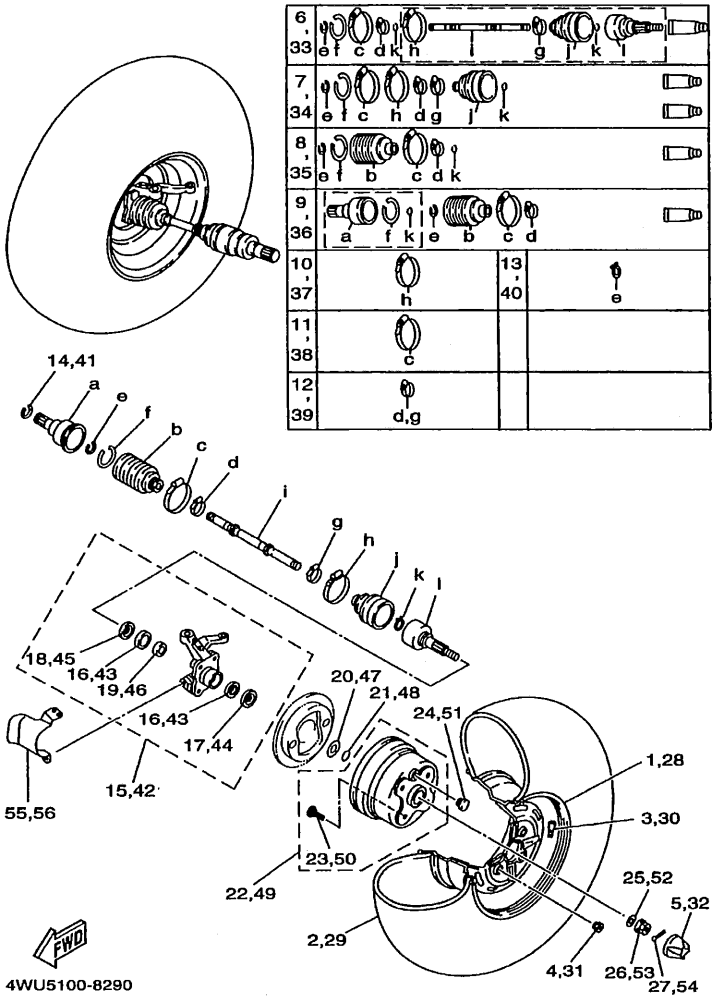

FIG. 29 FRONT WHEEL

REF. NO.	PART NO.	DESCRIPTION	4WU5	4WU6	4WU7			REMARKS
28	3HN-25180-00-33	WHEEL COMP.	1	1	1			YB
29	94108-1210G	TIRE (AT25X8-12 KT404)	1	1	1			
30	93900-00022	VALVE, RIM	1	1	1			TAIHEIYO
31	90179-10540	NUT	4	4	4			
32	52H-2512A-00	CAP, WHEEL	1	1	1			
33	4KB-2510F-00	BALL JOINT SET	1	1	1			
34	4KB-2510G-00	BOOT SET (BALL JOINT)	1	1	1			
35	4KB-2510H-00	BOOT SET (DOUBLE OFFSET JOINT)	1	1	1			
36	4KB-2510J-00	DOUBLE OFF SET JOINT	1	1	1			
37	3HN-2511G-01	BOOT BAND (BALL JOINT)	1	1	1			
38	4KB-2511H-00	BOOT BAND (DOUBLE OFFSET JOINT	1	1	1			
39	3HN-2512G-01	BOOT BAND (SMALL)	2	2	2			
40	2HR-2512J-00	SNAP RING	1	1	1			
41	4KB-2512H-00	CIRCLIP	1	1	1			
42	3HN-23502-01	STEERING, KNUCKLE ASSY (RIGHT)	1	1	1			
43	93306-00612	.BEARING	2	2	2			
44	93102-38383	.OIL SEAL	1	1	1			
45	93102-38417	.OIL SEAL	1	1	1			
46	90560-30325	.SPACER	1	1	1			
47	90387-281V8	COLLAR	1	1	1			
48	93210-26606	O-RING	1	1	1			
49	3HN-25111-02	HUB, FRONT	1	1	1			
50	90114-10012	.BOLT, SERRATION	4	4	4			
51	2NL-25335-01	CAP	1	1	1			
52	90201-163M0	WASHER, PLATE	1	1	1			
53	90171-16048	NUT, CASTLE	1	1	1			
54	91401-30030	PIN, COTTER	1	1	1			

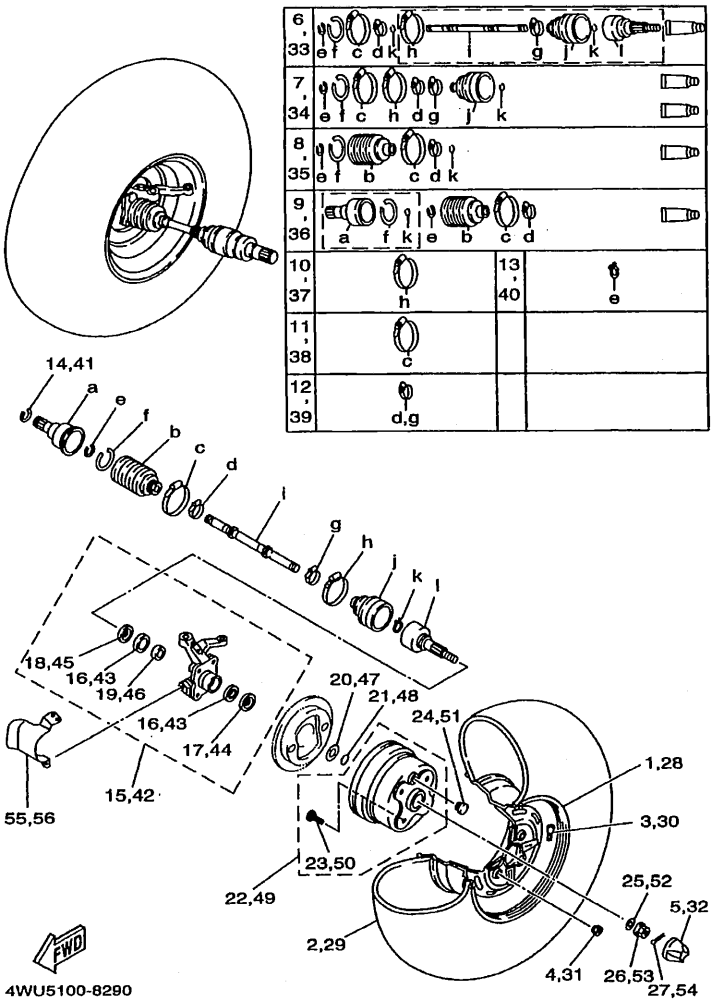

FIG. 29 FRONT WHEEL

REF. NO.	PART NO.	DESCRIPTION	4WU5	4WU6	4WU7			REMARKS
55	4GB-2331M-00	COVER, RING	1	1	1			LEFT
56	4GB-2331N-00	COVER, RING	1	1	1			RIGHT

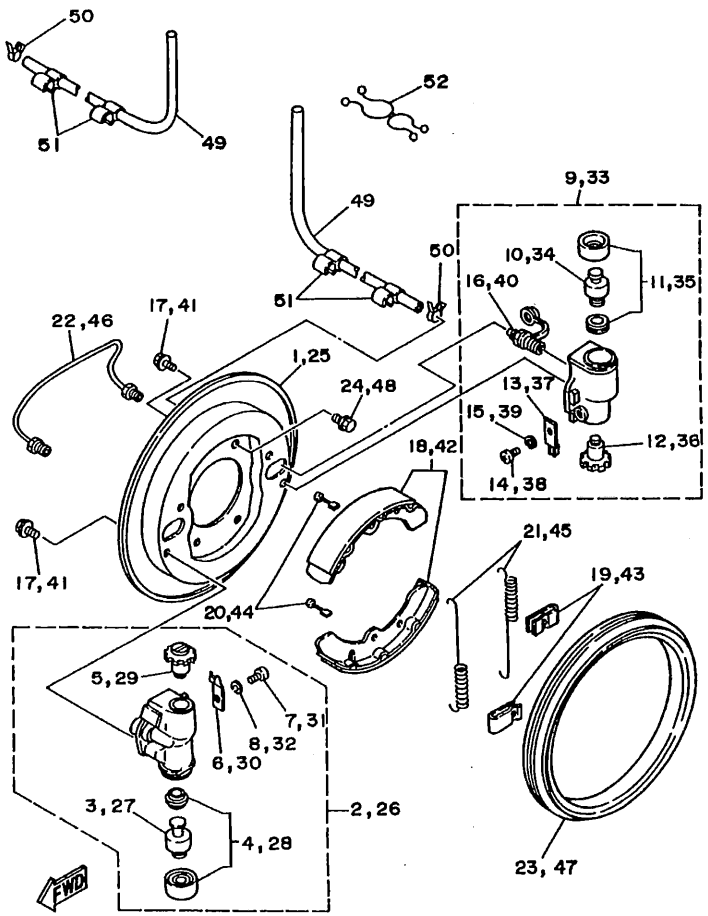

4SH1100-6330

FIG. 30 FRONT BRAKE

REF. NO.	PART NO.	DESCRIPTION	4WU5	4WU6	4WU7			REMARKS
1	3HN-27208-10	BACKING PLATE SUBASSY (L/H)	1	1	1			
2	3HN-25950-00	WHEEL CYLINDER 1 (L/H)	1	1	1			
3	2HR-25814-00	.PISTON	1	1	1			
4	2HR-W0069-00	.CUP SET	1	1	1			
5	2HR-25738-00	.NUT BOLT COMP.	1	1	1			
6	2HR-25952-00	.LOCK SPRING	1	1	1			
7	98502-04006	.SCREW, PAN HEAD	1	1	1			
8	92902-04100	.WASHER, SPRING	1	1	1			
9	3HN-25960-00	WHEEL CYLINDER 2 (L/H)	1	1	1			
10	2HR-25814-00	.PISTON	1	1	1			
11	2HR-W0069-00	.CUP SET	1	1	1			
12	2HR-25738-00	.NUT BOLT COMP.	1	1	1			
13	2HR-25952-00	.LOCK SPRING	1	1	1			
14	98502-04006	.SCREW, PAN HEAD	1	1	1			
15	92902-04100	.WASHER, SPRING	1	1	1			
16	3HN-W0048-00	.BLEED SCREW KIT	1	1	1			
17	95812-06012	BOLT, FLANGE	4	4	4			
18	3HN-W2535-10	BRAKE SHOE SET	1	1	1			
19	J10-27281-00	SPRING, SHOE CLAMP	2	2	2			
20	3HN-27282-00	PIN, SHOE HOLD DOWN	2	2	2			
21	2HR-25133-00	SPRING, RETURN	2	2	2			
22	3HN-25883-00	PIPE, BRAKE 3	1	1	1			
23	3GH-25129-00	SEAL, PLATE DUST	1	1	1			
24	95817-08016	BOLT, FLANGE	4	4	4			
25	3HN-27208-00	BACKING PLATE SUBASSY (R/H)	1	1	1			
26	3HN-25980-00	WHEEL CYLINDER 1 (R/H)	1	1	1			
27	2HR-25814-00	.PISTON	1	1	1			

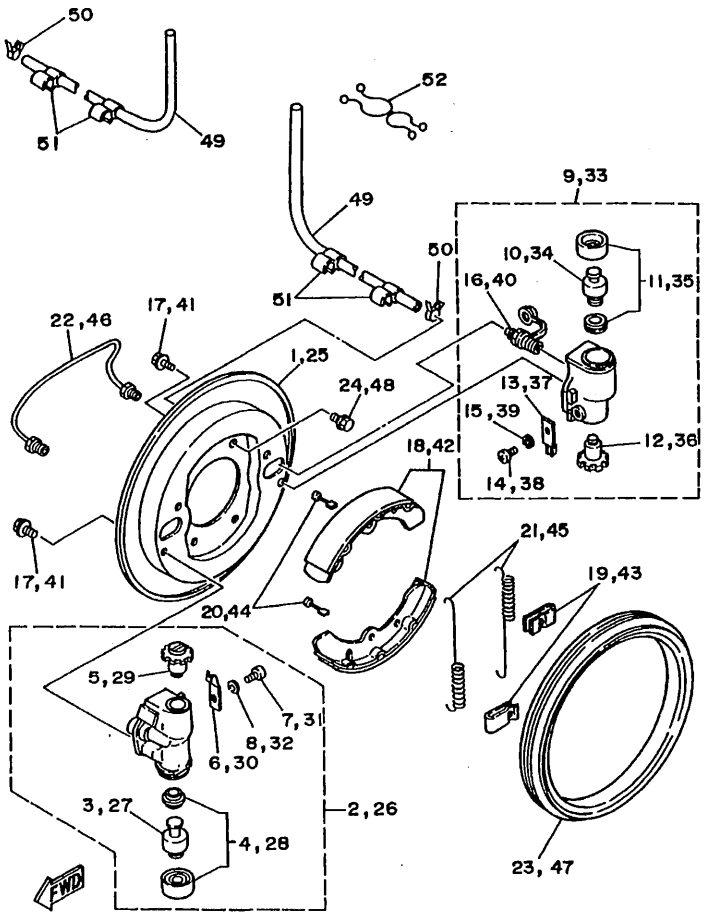

FIG. 30 FRONT BRAKE

REF. NO.	PART NO.	DESCRIPTION	4WU5	4WU6	4WU7			REMARKS
28	2HR-W0069-00	.CUP SET	1	1	1			
29	2HR-25748-00	.NUT BOLT COMP.	1	1	1			
30	2HR-25952-00	.LOCK SPRING	1	1	1			
31	98502-04006	.SCREW, PAN HEAD	1	1	1			
32	92902-04100	.WASHER, SPRING	1	1	1			
33	3HN-25990-00	WHEEL CYLINDER 2 (R/H)	1	1	1			
34	2HR-25814-00	.PISTON	1	1	1			
35	2HR-W0069-00	.CUP SET	1	1	1			
36	2HR-25748-00	.NUT BOLT COMP.	1	1	1			
37	2HR-25952-00	.LOCK SPRING	1	1	1			
38	98502-04006	.SCREW, PAN HEAD	1	1	1			
39	92902-04100	.WASHER, SPRING	1	1	1			
40	3HN-W0048-00	.BLEED SCREW KIT	1	1	1			
41	95812-06012	BOLT, FLANGE	4	4	4			
42	3HN-W2535-10	BRAKE SHOE SET	1	1	1			
43	J10-27281-00	SPRING, SHOE CLAMP	2	2	2			
44	3HN-27282-00	PIN, SHOE HOLD DOWN	2	2	2			
45	2HR-25133-00	SPRING, RETURN	2	2	2			
46	3HN-25883-00	PIPE, BRAKE 3	1	1	1			
47	3GH-25129-00	SEAL, PLATE DUST	1	1	1			
48	95817-08016	BOLT, FLANGE	4	4	4			
49	90445-07761	HOSE	2	2	2			
50	90467-07093	CLIP	2	2	2			
51	90467-06043	CLIP	4	4	4			
52	90464-23139	CLAMP	1	1	1			

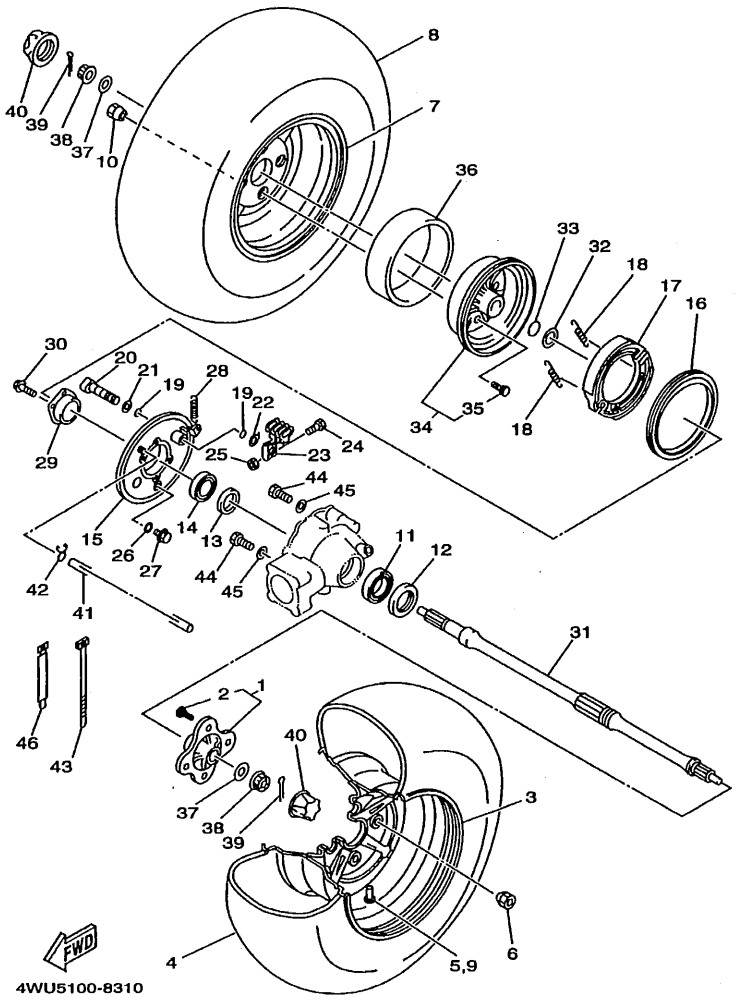

FIG. 31 REAR WHEEL

REF. NO.	PART NO.	DESCRIPTION	4WU5	4WU6	4WU7			REMARKS
1	2HR-25383-01	COLLAR, WHEEL	1	1	1			
2	90114-10010	.BOLT, SERRATION	4	4	4			
3	4KB-25390-01-33	REAR WHEEL COMP.	1	1	1			YB
4	94110-1210H	TIRE (AT25X10-12 KT405B)	1	1	1			
5	93900-00022	VALVE, RIM	1	1	1			TAIHEIYO
6	90179-10540	NUT	4	4	4			
7	4KB-25390-01-33	REAR WHEEL COMP.	1	1	1			YB
8	94110-1210H	TIRE (AT25X10-12 KT405B)	1	1	1			
9	93900-00022	VALVE, RIM	1	1	1			TAIHEIYO
10	90179-10540	NUT	4	4	4			
11	93306-00805	BEARING	1	1	1			
12	93106-42037	OIL SEAL	1	1	1			
13	93101-35097	OIL SEAL	1	1	1			
14	93306-20531	BEARING	1	1	1			
15	4GB-25321-00	PLATE, BRAKE SHOE	1	1	1			
16	3GH-25129-00	SEAL, PLATE DUST	1	1	1			
17	4GB-W2536-00	BRAKE SHOE SET	1	1	1			
18	90507-20002	SPRING, TENSION	2	2	2			
19	93210-14104	O-RING	2	2	2			
20	4GB-25351-00	CAMSHAFT	1	1	1			
21	148-25353-00	SHIM, CAMSHAFT	1	1	1			
22	3Y6-2533A-01	PLATE, INDICATOR	1	1	1			
23	4GB-25355-00	LEVER, CAMSHAFT	1	1	1			
24	90101-06278	BOLT	1	1	1			
25	95307-06600	NUT	1	1	1			
26	90201-10118	WASHER, PLATE	1	1	1			
27	95027-10016	BOLT, FLANGE	1	1	1			

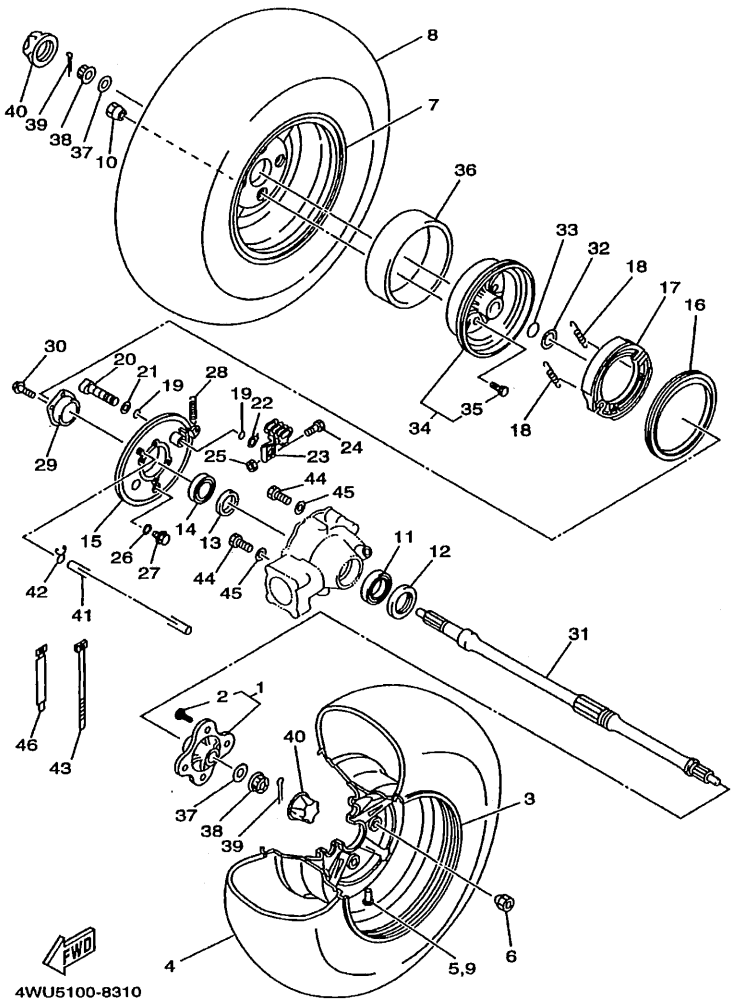

FIG. 31 REAR WHEEL

REF. NO.	PART NO.	DESCRIPTION	4WU5	4WU6	4WU7			REMARKS
28	90506-16482	SPRING, TENSION	1	1	1			
29	4GB-46513-00	RETAINER	1	1	1			
30	95817-08040	BOLT, FLANGE	4	4	4			
31	4WU-25381-00	AXLE, WHEEL	1	1	1			
32	90387-284T0	COLLAR	1	1	1			
33	93210-26606	O-RING	1	1	1			
34	4GB-2531E-00	DRUM, BRAKE	1	1	1			
35	90114-10012	.BOLT, SERRATION	4	4	4			
36	4GB-25336-00	RING 2	1	1	1			
37	90201-162L6	WASHER, PLATE	2	2	2			
38	90171-16048	NUT, CASTLE	2	2	2			
39	91401-30030	PIN, COTTER	2	2	2			
40	52H-2512A-00	CAP, WHEEL	2	2	2			
41	90445-083J8	HOSE	1	1	1			
42	90467-08075	CLIP	1	1	1			
43	437-83936-11	BAND, SWITCH CORD	1	1	1			
44	90105-10751	BOLT, WASHER BASED	4	4	4			
45	90201-101J1	WASHER, PLATE	4	4	4			
46	341-26397-01	BAND	2	2	2			

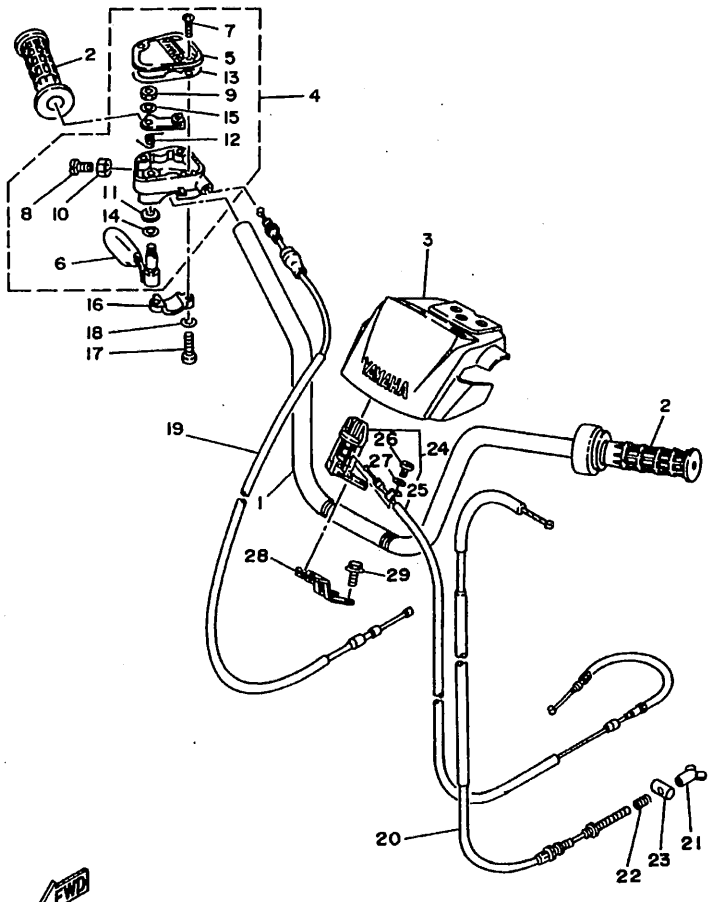

4WU1100-7320

FIG. 32 STEERING HANDLE. CABLE

REF. NO.	PART NO.	DESCRIPTION	4WU5	4WU6	4WU7			REMARKS
1	3HN-26111-00	HANDLEBAR	1	1	1			
2	3GB-26241-00	GRIP (LEFT)	2	2	2			
3	4KB-26124-00	PROTECTOR, HANDLEBAR	1	1	1			
4	4KB-26250-00	THROTTLE LEVER ASSY	1	1	1			
5	4KB-2628F-00	.CAP, GEAR	1	1	1			
6	1NV-2625G-01	.LEVER, THROTTLE	1	1	1			
7	90149-04278	.SCREW	3	3	3			
8	98507-05020	.SCREW, PAN HEAD	1	1	1			
9	95607-05100	.NUT, U	1	1	1			
10	95307-05700	.NUT	1	1	1			
11	93104-09025	.OIL SEAL	1	1	1			
12	1NV-26304-00	.SPRING	1	1	1			
13	4KB-2628G-00	.GASKET	1	1	1			
14	1NV-26129-00	.WASHER	1	1	1			
15	1NV-26398-00	.WASHER	1	1	1			
16	4V4-82913-00	HOLDER, LEVER LOWER 1	1	1	1			
17	98507-05020	SCREW, PAN HEAD	2	2	2			
18	92907-05100	WASHER, SPRING	2	2	2			
19	4WU-26311-00	CABLE, THROTTLE 1	1	1	1			
20	4WU-26341-00	CABLE, BRAKE	1	1	1			
21	20E-26343-00	NUT, ADJUSTING	1	1	1			
22	90501-10782	SPRING, COMPRESSION	1	1	1			
23	90249-12008	PIN	1	1	1			
24	4WU-26150-00	REV. LEVER ASSY.	1	1	1			
25	4WU-2637E-00	.WIRE, CONTROL 1	1	1	1			
26	98507-05018	SCREW, PAN HEAD	2	2	2			
27	92907-05600	WASHER, PLATE	2	2	2			

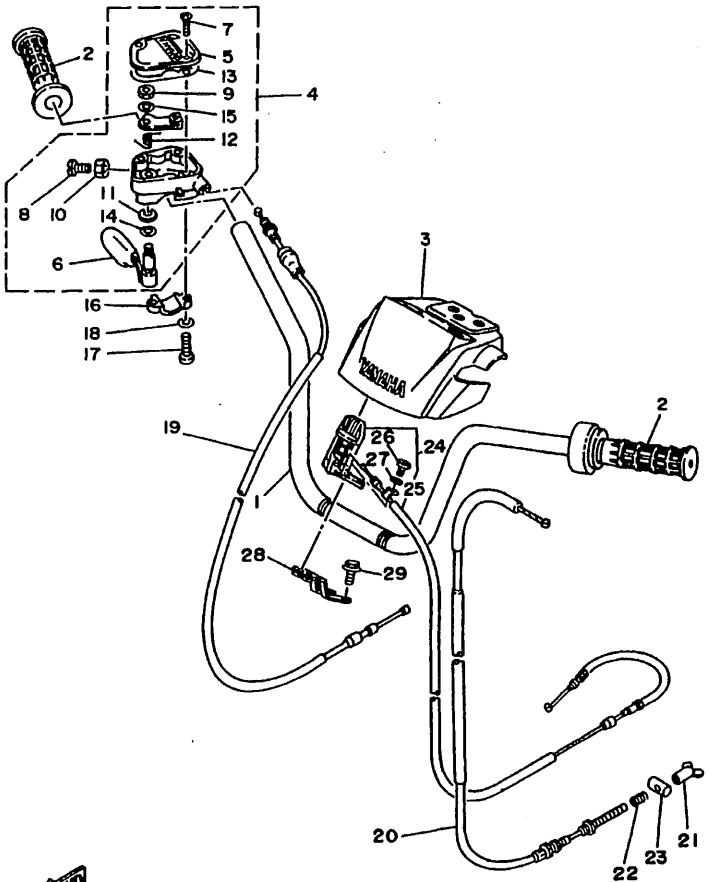

4WU1100-7320

FIG. 32 STEERING HANDLE. CABLE

REF. NO.	PART NO.	DESCRIPTION	4WU5	4WU6	4WU7			REMARKS
28	4KB-2612E-00	BRACKET	1	1	1			
29	95807-06012	BOLT, FLANGE	2	2	2			

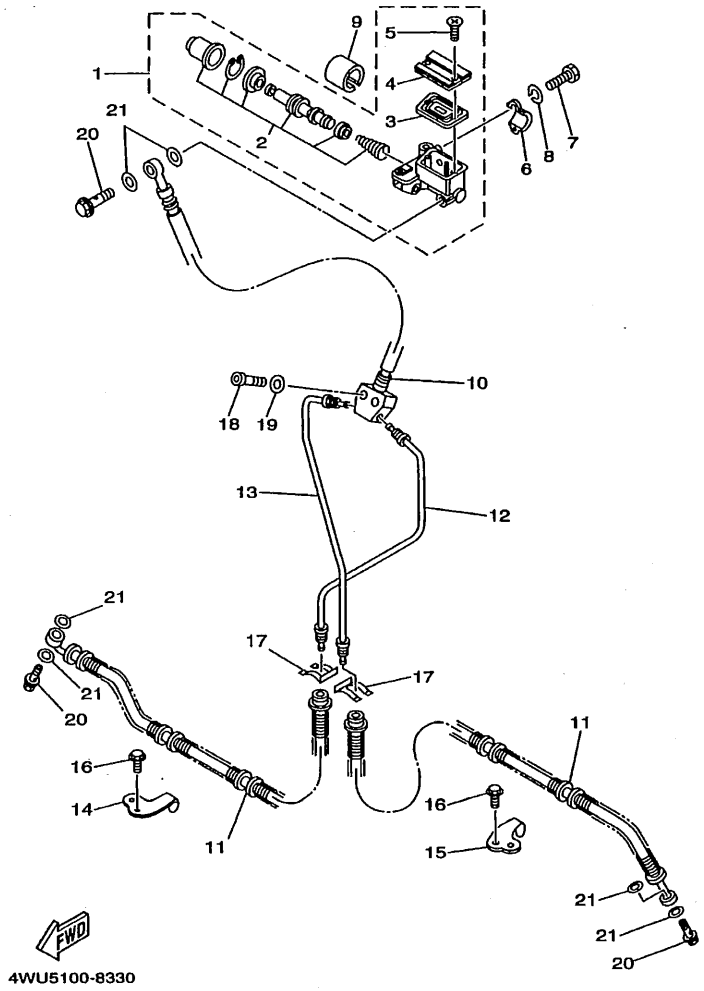

FIG. 33 FRONT MASTER CYLINDER

REF. NO.	PART NO.	DESCRIPTION	4WU5	4WU6	4WU7			REMARKS
1	2GU-25870-00	MASTER CYLINDER SUB ASSY	1	1	1			
2	4H7-W0041-50	.CYLINDER KIT, MASTER	1	1	1			
3	4L0-25854-00	.DIAPHRAGM, RESERVOIR	1	1	1			
4	4H7-25852-00	.CAP, RESERVOIR	1	1	1			
5	98706-04012	.SCREW, FLAT HEAD	2	2	2			
6	56A-25867-00	BRACKET, MASTER CYLINDER	1	1	1			
7	97007-06025	BOLT	2	2	2			
8	92907-06600	WASHER, PLATE	2	2	2			
9	1UY-26259-00	COLLAR	1	1	1			
10	4KB-25872-00	HOSE, BRAKE 1	1	1	1			
11	4WU-25873-00	HOSE, BRAKE 2	2	2	2			
12	4KB-25871-00	PIPE, BRAKE	1	1	1			
13	4KB-25882-00	PIPE, BRAKE 2	1	1	1			
14	4GB-25875-00	HOLDER, BRAKE HOSE 1	1	1	1			
15	4GB-25876-00	HOLDER, BRAKE HOSE 2	1	1	1			
16	95827-06012	BOLT, FLANGE	4	4	4			
17	2GU-25866-00	CIRCLIP	2	2	2			
18	97027-08030	BOLT	2	2	2			
19	92907-08600	WASHER, PLATE	2	2	2			
20	90401-10159	BOLT, UNION	3	3	3			
21	90201-10118	WASHER, PLATE	6	6	6			

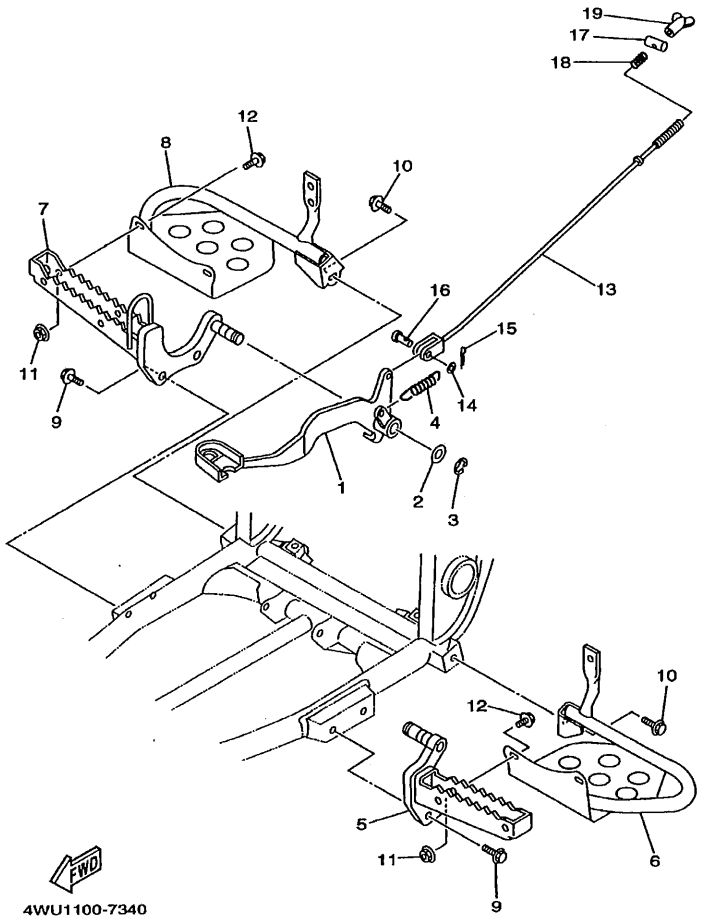

FIG. 34 STAND. FOOTREST

REF. NO.	PART NO.	DESCRIPTION	4WU5	4WU6	4WU7			REMARKS
1	4WU-27211-00	PEDAL, BRAKE	1	1	1			
2	90201-15797	WASHER, PLATE	1	1	1			
3	93430-12008	CIRCLIP	1	1	1			
4	90506-16318	SPRING, TENSION	1	1	1			
5	4KB-27411-00	FOOTREST 1	1	1	1			
6	4WU-27445-00	PLATE 1	1	1	1			
7	4WU-27421-00	FOOTREST 2	1	1	1			
8	4WU-27446-00	PLATE 2	1	1	1			
9	95817-10020	BOLT, FLANGE	4	4	4			
10	95827-08012	BOLT, FLANGE	2	2	2			
11	95707-08500	NUT, FLANGE	4	4	4			
12	95817-08016	BOLT, FLANGE	4	4	4			
13	4WU-27231-00	ROD, BRAKE	1	1	1			
14	92907-06200	WASHER	1	1	1			
15	91401-20012	PIN, COTTER	1	1	1			
16	90240-06076	PIN, CLEVIS	1	1	1			
17	90249-12008	PIN	1	1	1			
18	90501-10245	SPRING, COMPRESSION	1	1	1			
19	20E-26343-00	NUT, ADJUSTING	1	1	1			

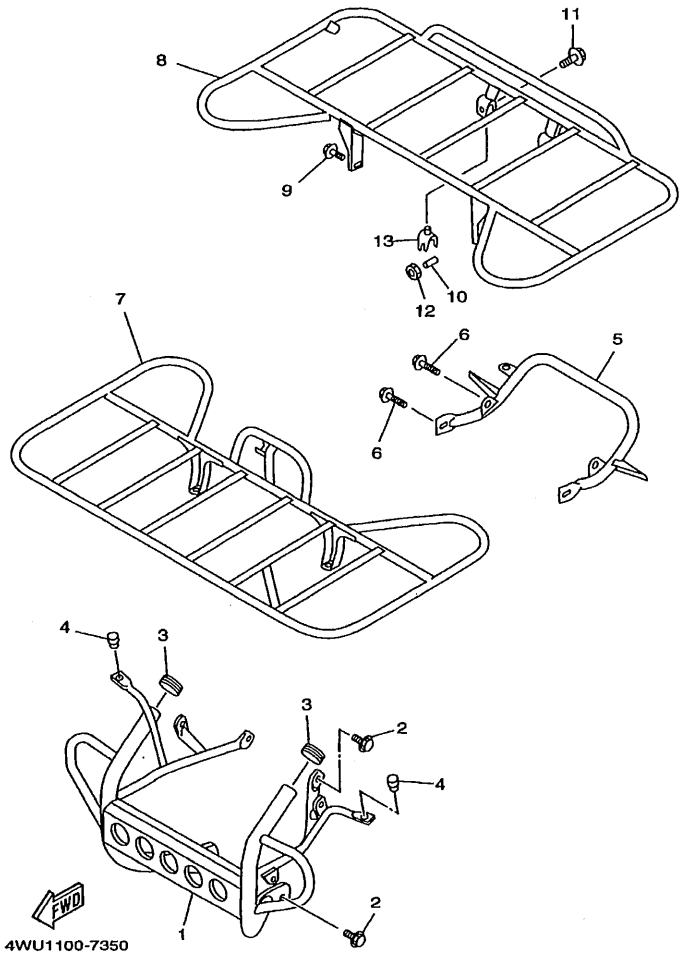

FIG. 35 GUARD

REF. NO.	PART NO.	DESCRIPTION	4WU5	4WU6	4WU7			REMARKS
1	4WU-2845N-00	BAR, CARRY FRONT	1	1				
	4WU-2845N-10	BAR, CARRY FRONT			1			
2	95817-08012	BOLT, FLANGE	4	4	4			
3	2HR-28415-00	DAMPER 1	2	2	2			
4	4N0-27114-00	STOPPER, MAIN STAND	2	2	2			
5	3GH-2845R-00	BAR, CARRY REAR	1	1				
	3GH-2845R-10	BAR, CARRY REAR			1			
6	95817-08016	BOLT, FLANGE	4	4	4			
7	4SH-24841-00	CARRIER, FRONT	1	1	1			YB
8	4SH-24842-00	CARRIER, REAR	1	1	1			YB
9	95817-08016	BOLT, FLANGE	2	2	2			
10	90560-06243	SPACER	2	2	2			
11	95827-06035	BOLT, FLANGE	2	2	2			
12	95607-06100	NUT, U	2	2	2			
13	24W-2483H-00	BAND	2	2	2			

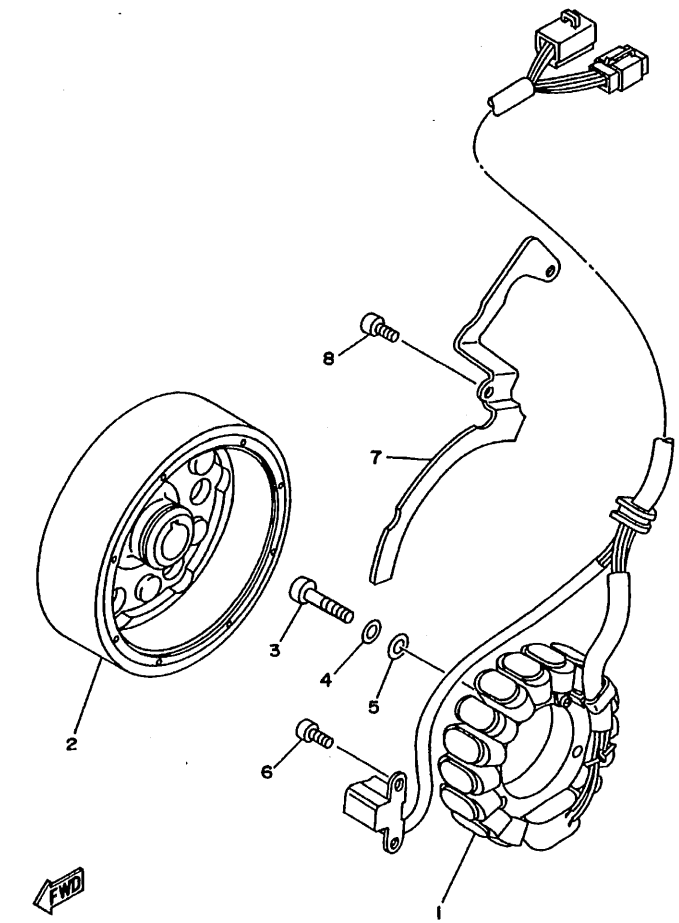

4KB1100-5410

FIG. 36 GENERATOR

REF. NO.	PART NO.	DESCRIPTION	4WU5	4WU6	4WU7			REMARKS
1	4KB-85510-11	STATOR ASSY	1	1	1			
2	4KB-85550-10	ROTOR ASSY	1	1	1			
3	98507-06030	SCREW, PAN HEAD	3	3	3			
4	92907-06100	WASHER, SPRING	3	3	3			
5	92907-06600	WASHER, PLATE	3	3	3			
6	91317-05012	BOLT	2	2	2			
7	4KB-15113-10	PLATE	1	1	1			
8	91317-05012	BOLT	2	2	2			

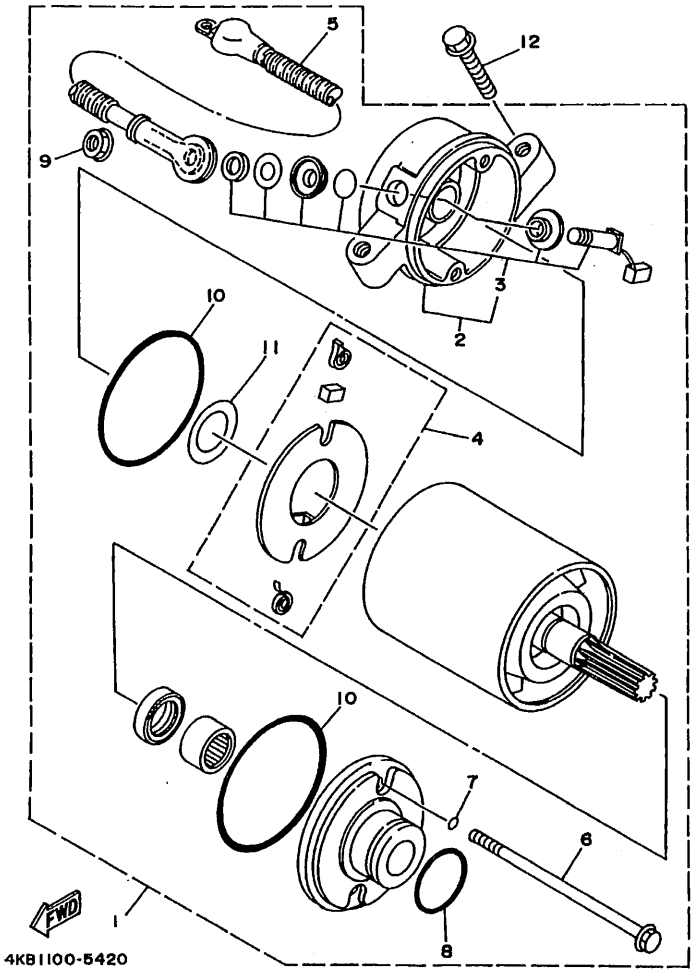

FIG. 37 STARTING MOTOR

REF. NO.	PART NO.	DESCRIPTION	4WU5	4WU6	4WU7			REMARKS
1	4KB-81800-00	STARTING MOTOR ASSY	1	1	1			
2	4KB-81820-00	.REAR BRACKET ASSY	1	1	1			
3	4KB-81818-00	..BLUSH AND BOLT	1	1	1			
4	4H7-81840-00	.BRUSH HOLDER ASSY	1	1	1			
5	4KB-81815-00	.CORD, STARTER MOTOR	1	1	1			
6	3GD-81826-00	.BOLT, THROUGH	2	2	2			
7	8L6-81847-50	.O-RING	2	2	2			
8	1UY-81847-50	.O-RING	1	1	1			
9	95302-06600	.NUT	1	1	1			
10	4H7-81844-50	.O-RING	2	2	2			
11	4H7-81843-50	.WASHER 1	1	1	1			
12	95027-06030	BOLT, FLANGE	2	2	2			

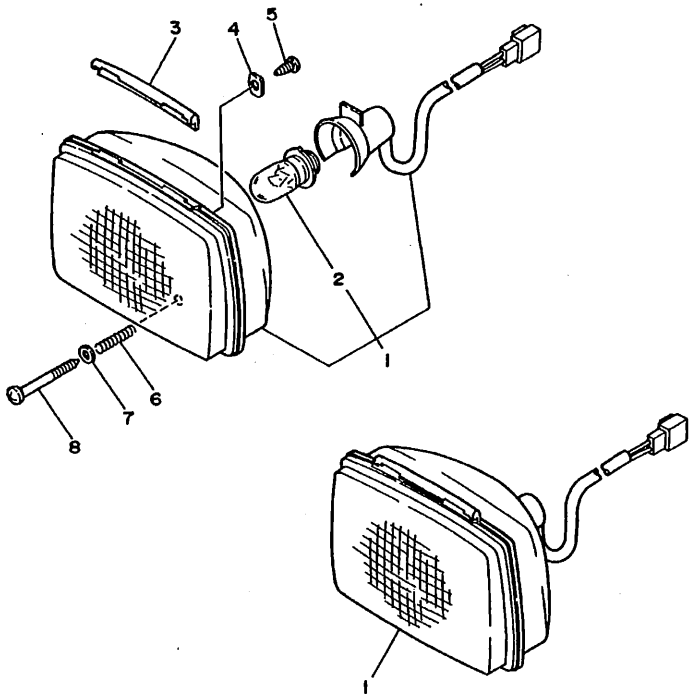

FWD

4GB9100-5410

FIG. 38 HEADLIGHT

REF. NO.	PART NO.	DESCRIPTION	4WU5	4WU6	4WU7			REMARKS
1	2HR-84310-40	HEADLIGHT UNIT ASSY	2	2	2			
2	19G-84314-00	.BULB, HEADLIGHT (12V-25/25W)	1	1	1			
3	26A-84143-00	DAMPER, HEADLIGHT STAY	2	2	2			
4	26A-8411H-00	PLATE, STOPPER	4	4	4			
5	97707-40510	SCREW, TAPPING	4	4	4			
6	18A-84132-00	SPRING, SCREW	2	2	2			
7	92907-04600	WASHER	2	2	2			
8	18A-84131-00	SCREW, RIM ADJUSTER	2	2	2			

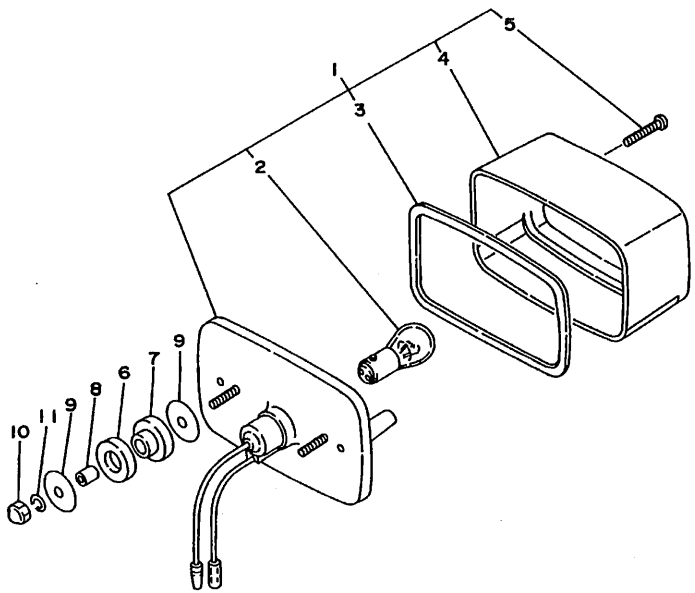

4GB300-4440

FIG. 39 TAILLIGHT

REF. NO.	PART NO.	DESCRIPTION	4WU5	4WU6	4WU7			REMARKS
1	52H-84710-00	TAILLIGHT UNIT ASSY	1	1				
2	3GD-84714-00	.BULB (12V-7.5W)	1	1				
3	1K8-84523-00	.GASKET, LENS	1	1				
4	21V-84721-00	.LENS, TAILLIGHT	1	1				
5	2E9-84524-00	.SCREW, LENS FITTING	2	2				
6	90202-14077	WASHER, PLATE	2	2				
7	90480-14088	GROMMET	2	2				
8	90560-07007	SPACER	2	2				
9	90201-06074	WASHER, PLATE	4	4				
10	95307-06800	NUT	2	2				
11	92907-06100	WASHER, SPRING	2	2				

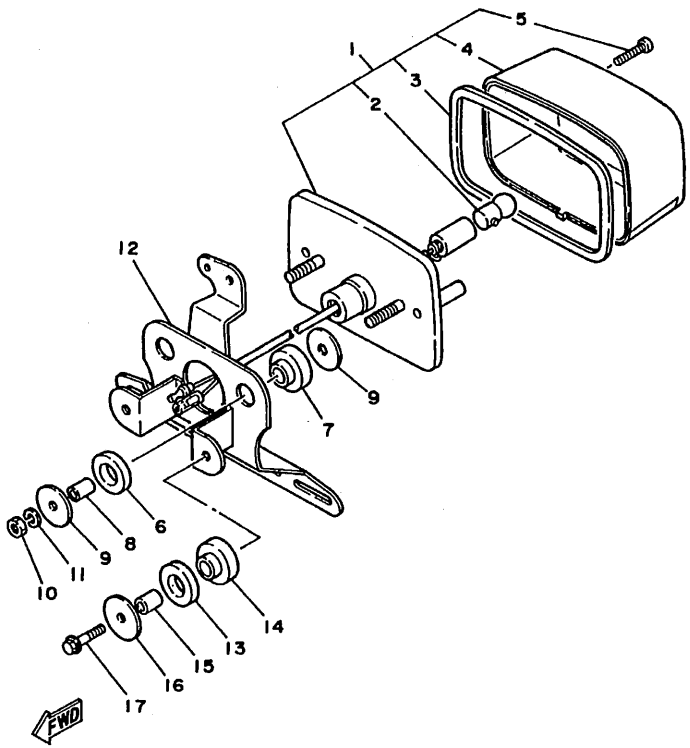

3GH4300-4400

FIG. 40 TAILLIGHT 2

REF. NO.	PART NO.	DESCRIPTION	4WU5	4WU6	4WU7			REMARKS
1	3HN-84710-00	TAILLIGHT UNIT ASSY			1			
2	3GD-84714-00	.BULB (12V-7.5W)			1			
3	1K8-84523-00	.GASKET, LENS			1			
4	3L6-84521-00	.LENS, TAILLIGHT			1			
5	2E9-84524-00	.SCREW, LENS FITTING			2			
6	90202-14077	WASHER, PLATE			2			
7	90480-14088	GROMMET			2			
8	90387-06595	COLLAR			2			
9	90201-06074	WASHER, PLATE			4			
10	95307-06600	NUT			2			
11	92907-06100	WASHER, SPRING			2			
12	3GH-84702-00	BRACKET, TAILLIGHT			1			
13	90202-14077	WASHER, PLATE			2			
14	90480-14088	GROMMET			2			
15	90387-06595	COLLAR			2			
16	90201-06074	WASHER, PLATE			2			
17	95807-06025	BOLT, FLANGE			2			

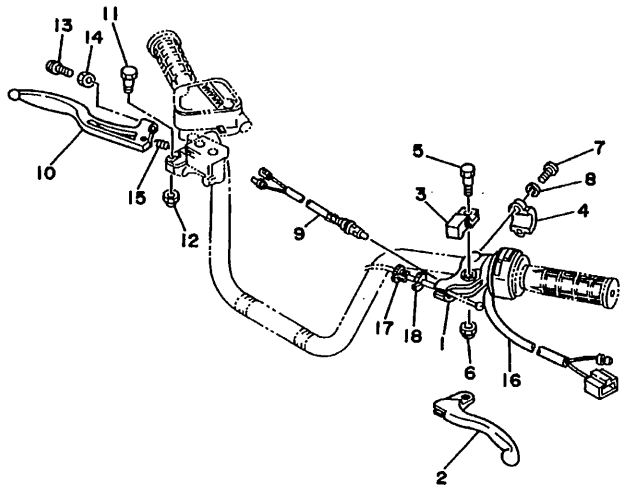

3HNK100-5440

FIG. 41 HANDLE SWITCH. LEVER

REF. NO.	PART NO.	DESCRIPTION	4WU5	4WU6	4WU7			REMARKS
1	1YW-82911-01	HOLDER, LEVER 1	1	1	1			
2	2HT-83912-00	LEVER 1	1	1	1			
3	1YW-83965-00	LEVER, LOCK	1	1	1			
4	2XJ-82913-00	HOLDER, LEVER LOWER 1	1	1	1			
5	90109-06576	BOLT	1	1	1			
6	95607-06100	NUT, U	1	1	1			
7	98507-06020	SCREW, PAN HEAD	2	2	2			
8	92907-06100	WASHER, SPRING	2	2	2			
9	1YW-83980-00	FRONT STOP SWITCH ASSY	1	1	1			
10	38W-83922-00	LEVER 2	1	1	1			
11	90109-06577	BOLT	1	1	1			
12	95607-06100	NUT, U	1	1	1			
13	90149-06131	SCREW	1	1	1			
14	90170-06010	NUT	1	1	1			
15	90501-10312	SPRING, COMPRESSION	1	1	1			
16	4GB-83973-00	SWITCH, HANDLE 3	1	1	1			
17	90123-08046	BOLT	1	1	1			
18	90179-08148	NUT	1	1	1			

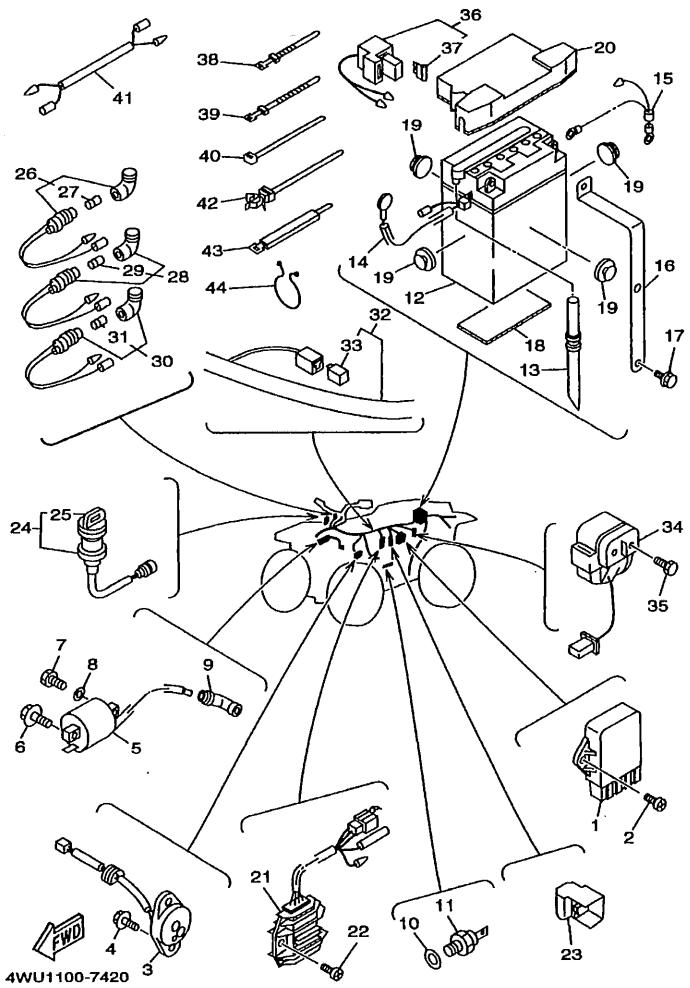

FIG. 42 ELECTRICAL 1

REF. NO.	PART NO.	DESCRIPTION	4WU5	4WU6	4WU7			REMARKS
1	4SH-85540-00	C.D.I. UNIT ASSY	1	1	1			
2	98907-06020	SCREW, BIND	2	2	2			
3	4KB-82540-01	NEUTRAL SWITCH ASSY	1	1	1			
4	90119-06044	BOLT, WITH WASHER	2	2	2			
5	3KJ-82310-10	IGNITION COIL ASSY	1	1	1			
6	90109-06723	BOLT	1	1	1			
7	97007-06020	BOLT	1	1	1			
8	92907-06600	WASHER, PLATE	1	1	1			
9	371-82370-00	PLUG CAP ASSY	1	1	1			
10	90201-12172	WASHER, PLATE	1	1	1			
11	2HT-82560-10	THERMO SWITCH ASSY	1	1	1			
12	24W-82110-60	BATTERY ASSY			1			
	24W-82110-G0	BATTERY ASSY	1	1				
13	90445-08336	HOSE	1	1	1			
14	2HR-82115-00	WIRE, PLUS LEAD	1	1	1			
15	2HR-82116-00	WIRE, MINUS LEAD	1	1	1			
16	4WU-82128-00	BRACKET, BATTERY	1	1	1			
17	95827-06012	BOLT, FLANGE	2	2	2			
18	5Y1-82122-00	SEAT, BATTERY	1	1	1			
19	371-82121-00	PAD, BATTERY	4	4	4			
20	4GB-82129-00	COVER, BATTERY	1	1	1			
21	4KB-81960-02	RECTIFIER & REGULATOR ASSY	1	1	1			
22	98907-06020	SCREW, BIND	2	2	2			
23	29U-81950-93	RELAY ASSY	1	1	1			
24	4GB-82510-00	MAIN SWITCH ASSY	1	1	1			
25	3HN-82579-00	CAP, KEY	1	1	1			
26	24W-83530-01	PILOT LIGHT ASSY	1	1	1			

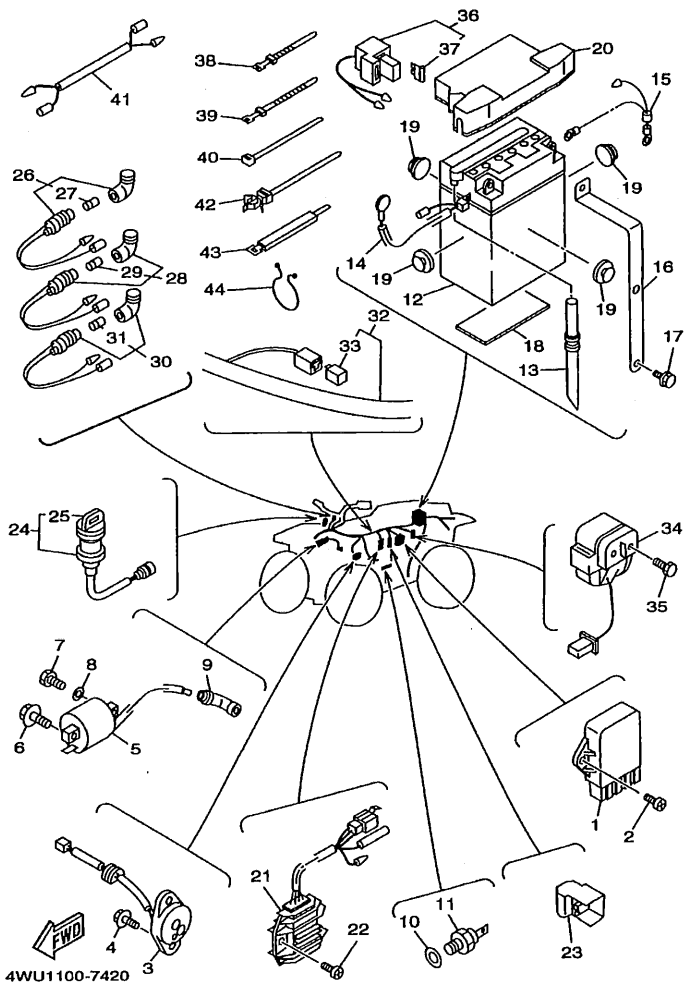

FIG. 42 ELECTRICAL 1

REF. NO.	PART NO.	DESCRIPTION	4WU5	4WU6	4WU7			REMARKS
27	123-83516-21	.BULB (12V-3.4W)	1	1	1			
28	52G-83530-01	PILOT LIGHT ASSY	1	1	1			
29	123-83516-21	.BULB (12V-3.4W)	1	1	1			
30	2HR-83530-01	PILOT LIGHT ASSY	1	1	1			
31	123-83516-21	.BULB (12V-3.4W)	1	1	1			
32	4WU-82590-00	WIRE HARNESS ASSY			1			
	4WU-82590-30	WIRE HARNESS ASSY	1	1				
33	3WP-81980-00	.DIODE ASSY	1	1	1			
34	4KB-81940-00	STARTER RELAY ASSY	1	1	1			
35	95027-06008	BOLT, FLANGE	2	2	2			
36	4KB-82150-00	FUSE HOLDER ASSY	1	1	1			
37	1AE-82151-00	.FUSE (30A-BL)	2	2	2			
38	437-83936-01	BAND, SWITCH CORD	2	2	2			
39	437-83936-11	BAND, SWITCH CORD	1	1	1			
40	90465-10098	CLAMP	1	1	1			
41	59V-82541-00	WIRE, LEAD	1	1	1			
42	90464-12089	CLAMP	1	1	1			
43	341-26397-01	BAND	2	2	2			
44	90464-23139	CLAMP	1	1	1			

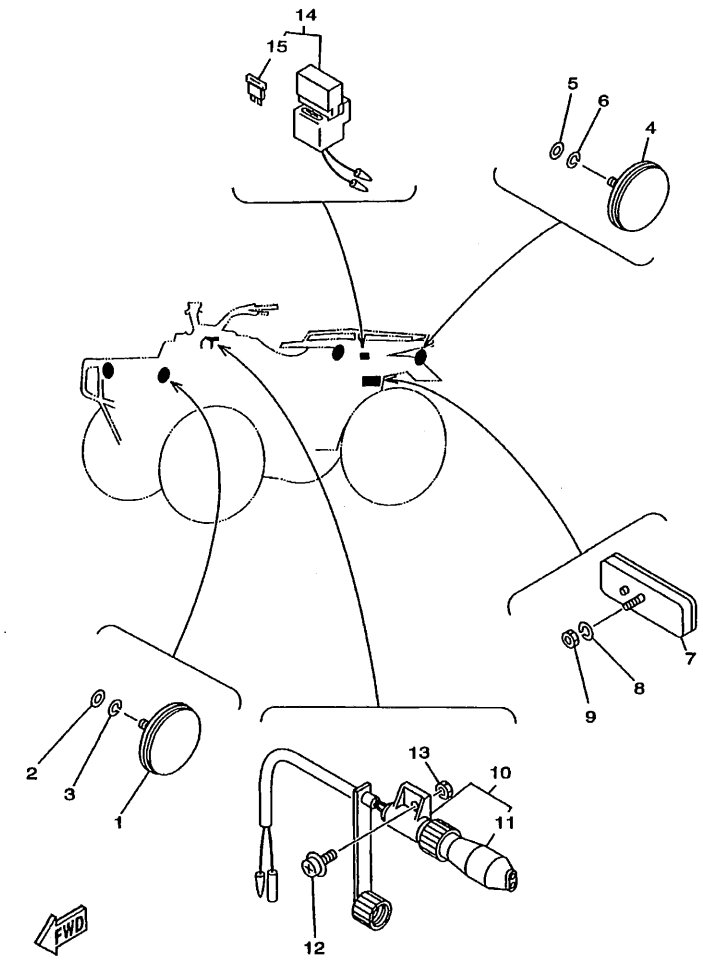

4WU5100-8430

FIG. 43 ELECTRICAL 2

REF. NO.	PART NO.	DESCRIPTION	4WU5	4WU6	4WU7			REMARKS
1	2EK-85111-00	REFLECTOR, FRONT 1			2			
2	92907-05200	WASHER			2			
3	92907-05100	WASHER, SPRING			2			
4	449-85131-02	REFLECTOR, REAR 1			2			
5	92907-05200	WASHER			2			
6	92907-05100	WASHER, SPRING			2			
7	3Y6-85130-02	REAR REFLECTOR ASSY			1			
8	92907-05100	WASHER, SPRING			1			
9	95307-05600	NUT			1			
10	59V-81920-00	TERMINAL ASSY	1	1	1			
11	59V-81942-00	.COVER	1	1	1			
12	90159-05018	SCREW, WITH WASHER	1	1	1			
13	95707-05500	NUT, FLANGE	1	1	1			
14	4HF-82150-00	FUSE HOLDER ASSY	1	1	1			
15	42X-82151-00	.FUSE (10A-BL)	2	2	2			

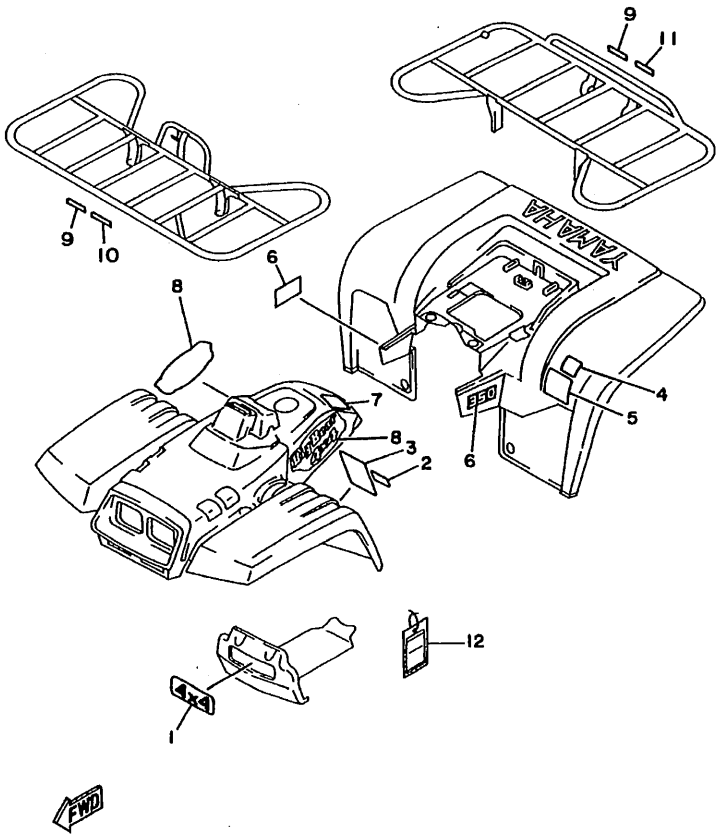

FIG. 44 EMBLEM.LABEL 1

REF. NO.	PART NO.	DESCRIPTION	4WU5	4WU6	4WU7			REMARKS
1	3HN-2118F-00	EMBLEM 2	1	1				
2	4KB-21578-00	EMBLEM	1	1				ENGLISH
3	4WU-21568-00	LABEL, WARNING	1	1				ENGLISH *1
4	4WU-2151H-00	LABEL 5	1	1				ENGLISH *2
5	4SH-21696-00	LABEL, CAUTION	1	1				ENGLISH *2
6	4WU-2163G-40	EMBLEM 1	2	2				UR FOR RTR
	4WU-2163G-50	EMBLEM 1	2	2				UR FOR PDG
	4UH-2163G-10	EMBLEM 1	2	2				UR FOR DNYS1
7	3FA-2415A-00	LABEL, CAUTION	1	1				ENGLISH *3
8	4WU-2173E-30	GRAPHIC 1	2	2				UR FOR RTR
	4WU-2173E-40	GRAPHIC 1	2	2				UR FOR PDG
	4WU-2173E-51	GRAPHIC 1	2	2				UR FOR DNYS1
9	3MX-24875-00	LABEL 1	2	2				ENGLISH
10	4GB-24877-00	LABEL, CAUTION	1	1				ENGLISH
11	4SH-24897-00	EMBLEM	1	1				ENGLISH
12	3GH-2819R-00	TAG, WARNING	1	1				

*1. Attached to "3HN-W2151-HO/G1/J0" (Fig.19)
*2. Attached to "4UH-W2161-K0/JF/L0" (Fig.20)
*3. Attached to "3HN-W217A-F0/E0/G0" (Fig.19)

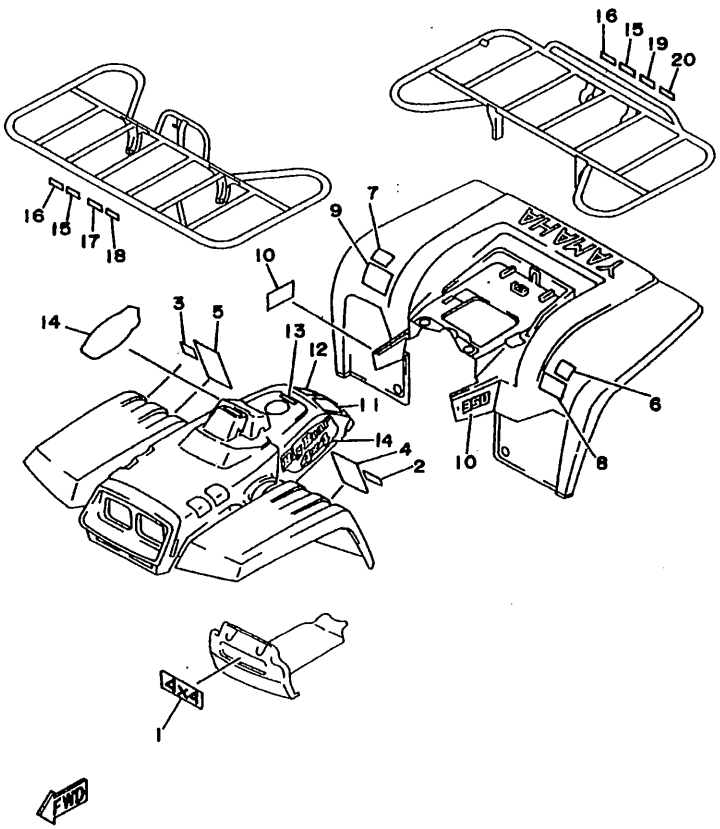

FIG. 45 EMBLEM.LABEL 2

REF. NO.	PART NO.	DESCRIPTION	4WU5	4WU6	4WU7			REMARKS
1	3HN-2118F-00	EMBLEM 2			1			
2	4KB-21578-00	EMBLEM			1			ENGLISH
3	4KB-21578-10	EMBLEM			1			FRENCH
4	4WU-21568-00	LABEL, WARNING			1			ENGLISH *1
5	4WU-21568-10	LABEL, WARNING			1			FRENCH *1
6	4WU-2151H-00	LABEL 5			1			ENGLISH *2
7	4WU-2151H-10	LABEL 5			1			FRENCH *2
8	4SH-21696-00	LABEL, CAUTION			1			ENGLISH *2
9	4SH-21696-10	LABEL, CAUTION			1			FRENCH *2
10	4WU-2163G-40	EMBLEM 1			1			UR FOR RTR
	4WU-2163G-50	EMBLEM 1			1			UR FOR PDG
	4WU-2163G-10	EMBLEM 1			1			UR FOR DNYS1
11	3FA-2415A-00	LABEL, CAUTION			1			ENGLISH *3
12	3FA-2415A-10	LABEL, CAUTION			1			FRENCH *3
13	4SH-2416E-00	LABEL, CAUTION CANADA			1			
14	4WU-2173E-30	GRAPHIC 1			2			UR FOR RTR
	4WU-2173E-40	GRAPHIC 1			2			UR FOR PDG
	4WU-2173E-51	GRAPHIC 1			2			UR FOR DNYS1
15	3MX-24875-00	LABEL 1			2			ENGLISH
16	3MX-24875-10	LABEL 1			2			FRENCH
17	4GB-24877-00	LABEL, CAUTION			1			ENGLISH
18	4GB-24877-10	LABEL, CAUTION			1			FRENCH
19	4SH-24897-00	EMBLEM			1			ENGLISH
20	4SH-24897-10	EMBLEM			1			FRENCH

*1. Attached to "3HN-W215C-H0/G0/J0." (Fig.19)
*2. Attached to "4UH-W216C-K0/J0/L0." (Fig.20)
*3. Attached to "3HN-W217C-F0/P0/G0" (FIG.19)

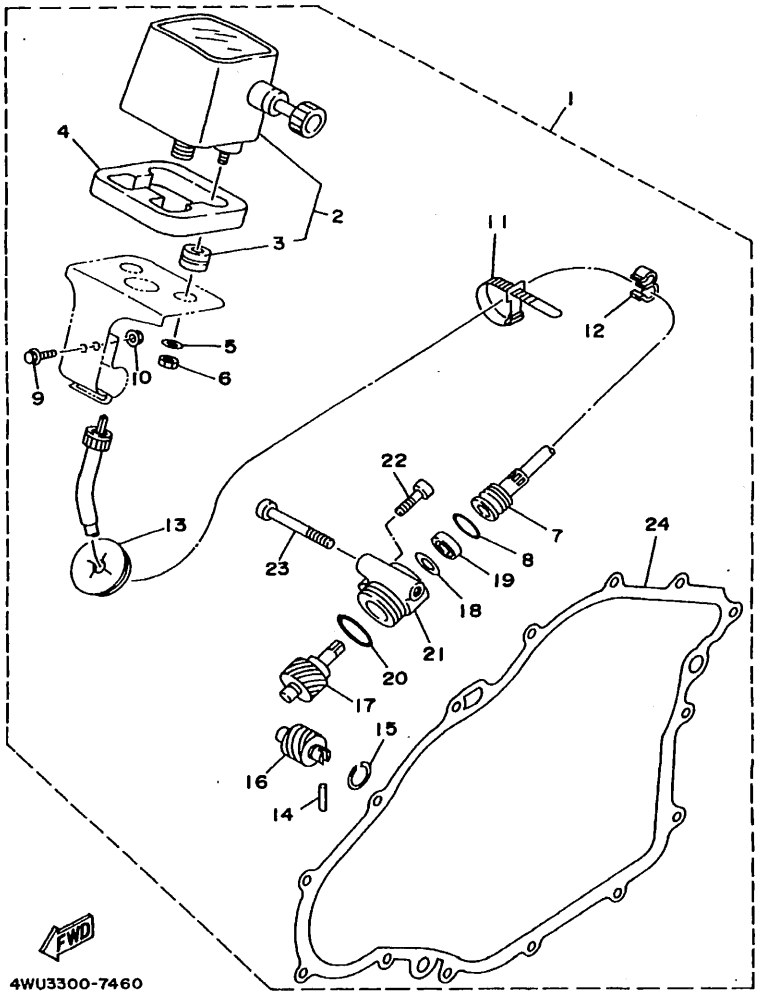

FIG. 46 ALTERNATE (METER)

REF. NO.	PART NO.	DESCRIPTION	4WU5	4WU6	4WU7			REMARKS
1	4WU-W0081-00	SPEEDOMETER KIT		1	1			
2	4KB-83500-00	.SPEEDOMETER ASSY	1	1	1			
3	3GH-83523-00	..DAMPER	2	2	2			
4	3JN-83664-00	.DAMPER	1	1	1			
5	90201-05725	.WASHER, PLATE	2	2	2			
6	95307-05600	.NUT	2	2	2			
7	4WU-83550-00	.SPEEDOMETER CABLE ASSY	1	1	1			
8	93210-14104	.O-RING	1	1	1			
9	95807-06016	.BOLT, FLANGE	1	1	1			
10	95707-06500	.NUT, FLANGE	1	1	1			
11	437-83936-11	.BAND, SWITCH CORD	1	1	1			
12	90468-15020	.CLIP	1	1	1			
13	90480-25461	.GROMMET	1	1	1			
14	93603-14240	.PIN, DOWEL	1	1	1			
15	93440-14155	.CIRCLIP	1	1	1			
16	59V-17831-00	.GEAR, DRIVE	1	1	1			
17	59V-17841-00	.GEAR, DRIVEN	1	1	1			
18	90201-12163	.WASHER, PLATE	1	1	1			
19	93102-08307	.OIL SEAL	1	1	1			
20	93210-24253	.O-RING	1	1	1			
21	4KB-17811-00	.HOUSING, TACHOMETER GEAR	1	1	1			
22	98507-06016	.SCREW, PAN HEAD	1	1	1			
23	98507-06030	.SCREW, PAN HEAD	1	1	1			
24	4KB-15462-00	.GASKET, CRANKCASE COVER 3	1	1	1			

NUMERICAL INDEX

PART NO.	GRID NO.
4H7-W0041-50	E- 11
3HN-W0048-00	E- 5
	E- 6
2HR-W0069-00	E- 5
	E- 6
4WU-W0081-00	F- 11
3HN-W215C-G0	C- 14
3HN-W215C-H0	C- 14
3HN-W215C-J0	C- 14
3HN-W2151-G1	C- 14
3HN-W2151-H0	C- 14
3HN-W2151-J0	C- 14
4UH-W216C-J0	D- 2
4UH-W216C-K0	D- 2
4UH-W216C-L0	D- 2
4UH-W2161-JF	D- 2
4UH-W2161-K0	D- 2
4UH-W2161-L0	D- 2
3HN-W217A-E0	C- 15
3HN-W217A-F0	C- 15
3HN-W217A-G0	C- 15
3HN-W217C-F0	C- 15
3HN-W217C-G0	C- 15
3HN-W217C-P0	C- 15
3HN-W2535-10	E- 5
	E- 6
4GB-W2536-00	E- 7
4KB-W4614-10	D- 7
4KB-Y1754-00	C- 8
4GB-Y4612-00	D- 5
4WU-11101-00	B- 2
3Y1-1111F-00	B- 2
3Y1-11133-11	B- 2
4KB-11145-00	B- 7
4WU-11160-00	B- 2
4KB-11165-00	B- 2
4WU-11166-00	B- 2
1UY-11181-00	B- 2
2NL-11186-00	B- 2
4KB-11186-00	D- 8
2NL-11187-00	B- 2
214-11198-01	D- 5
4WU-11310-00	B- 4
4KB-11351-00	B- 4
4KB-11400-00	B- 5
1UY-11454-00	B- 5
3Y1-11531-01	B- 5
4KB-11536-00	B- 5

PART NO.	GRID NO.
4KB-11565-00	B- 5
4GB-11610-00	B- 5
4GB-11610-20	B- 5
4GB-11610-40	B- 5
1YW-11631-01-Y0	B- 5
55V-11633-00	B- 5
1YW-11636-01	B- 5
1YW-11638-01	B- 5
3Y1-12111-01	B- 6
1UY-12113-01	B- 6
1UY-12114-01	B- 6
3Y1-12116-00	B- 6
3Y1-12117-01	B- 6
1J7-12118-00	B- 6
1J7-12119-01	B- 6
3Y1-12121-01	B- 6
3GD-12151-00	B- 6
3Y1-12156-00	B- 6
31G-12158-00	B- 6
31G-12159-02	B- 6
1YW-12170-00	B- 7
3HN-12176-00	B- 7
31G-12210-01	B- 7
3GD-12213-00	B- 7
31G-12214-00	B- 7
31G-12222-00	B- 7
3Y1-12231-01	B- 7
4KB-12241-00	B- 7
51Y-13132-50	B- 8
4KB-13161-01	B- 9
4KB-13171-00	B- 8
4KB-13181-00	B- 9
1UY-13300-00	B- 8
4KB-13324-00	B- 8
1UY-13326-00	B- 8
3GD-13329-00	B- 8
51Y-13411-00	B- 8
2XK-13416-00	B- 8
1UY-13440-02	B- 8
4KB-13447-00	B- 8
4WU-13464-00	B- 9
4WU-13465-00	B- 9
4KB-13470-00	B- 9
1YW-13497-00	B- 8
4WU-13586-00	B- 10
4KB-14103-00	B- 12
12R-14105-00	B- 11
1UY-14107-20	B- 11

PART NO.	GRID NO.
4KB-1414N-40	B- 11
4G0-14142-42	B- 11
2H0-14147-00	B- 12
2LN-14147-00	B- 11
4KB-14147-00	B- 11
137-14153-00	B- 11
1UY-14155-00	B- 12
522-14161-00	B- 12
2A2-14172-16	B- 12
2VA-14185-00	B- 11
537-14186-00	B- 11
12R-14191-00	B- 11
24W-14193-00	B- 12
4KB-14193-20	B- 12
2HR-14197-00	B- 11
620-14231-25	B- 11
4KB-14264-00	B- 11
4KB-14275-00	B- 11
4KB-14285-00	B- 12
1YW-14411-00	B- 10
21V-14412-00	B- 10
3HN-1442F-00	B- 10
2HR-14437-01	B- 10
1YW-14451-00	B- 10
5H0-14452-00	B- 10
1AA-14453-00	B- 10
4WU-14453-00	B- 10
59V-14457-00	B- 10
1YW-14458-00	B- 10
1UY-14468-00	B- 10
1UY-14565-00	B- 11
2LN-14565-00	B- 11
4WU-14611-00	B- 13
3GD-14613-00	B- 13
4KB-14628-00	B- 13
4WU-1465R-00	B- 13
2HR-14711-02	B- 13
3YF-14714-00	B- 13
4SH-14752-00	B- 13
26H-1490H-00	B- 11
4WU-1490J-00	B- 11
4WU-14901-00	B- 11
4WU-14901-20	B- 11
2LN-14933-00	B- 11
14X-14937-00	B- 12
4WU-14940-00	B- 11
22U-14952-00	B- 12
4KB-14993-00	B- 11

PART NO.	GRID NO.
1J7-14994-00	B- 11
2A2-14997-00	B- 11
4KB-15100-00	B- 14
4KB-15113-10	E- 14
30X-15351-00	B- 8
4KB-15362-00	B- 15
2N4-15371-00	D- 5
4SH-15381-00	C- 2
1UY-15383-00	B- 14
11H-15383-01	C- 8
4KB-15383-00	B- 14
4WU-15411-00	B- 15
4KB-15421-00	B- 15
4WU-15431-00	B- 15
1UY-15443-00	C- 3
4KB-15451-00	B- 15
4KB-15462-00	B- 15
	F- 11
4KB-15492-00	B- 15
4KB-15512-00	C- 4
1UY-15517-01	C- 4
4KB-15517-00	C- 4
4KB-15521-00	C- 4
4KB-15522-00	C- 4
1UY-15590-00	C- 4
3GD-15699-00	C- 3
1UY-15710-00	C- 3
21V-15713-00	C- 3
24W-15714-00	C- 3
21V-15715-00	C- 3
1UY-15716-00	C- 3
1UY-15719-00	B- 15
1UY-15723-00	C- 3
21V-15741-00	C- 3
21V-15751-00	C- 3
3X3-15755-00	C- 3
21V-15767-00	C- 3
21V-15779-00	C- 3
4KB-16150-00	C- 5
30X-16154-00	C- 5
3J2-16324-00	C- 5
168-16325-00	C- 5
5Y1-16331-01	C- 5
132-16346-00	C- 10
5Y1-16351-00	C- 5
4KB-16356-00	C- 5
4KB-16357-00	C- 5
55V-16371-00	C- 5

PART NO.	GRID NO.
4WU-16611-00	C- 5
4SH-16620-01	C- 5
4SH-16626-00	C- 5
4SH-16664-00	C- 5
4KB-17121-00	C- 6
4KB-17131-00	C- 6
4KB-17141-00	C- 6
4WU-17151-00	C- 6
4KB-17211-00	C- 6
1YW-17221-00	C- 6
1YW-17231-01	C- 6
4KB-17241-00	C- 6
4KB-17243-00	C- 6
4WU-17251-00	C- 6
4KB-17253-00	C- 7
4KB-17285-00	C- 6
4KB-17411-00	C- 6
4KB-17421-00	C- 6
4KB-17432-00	C- 7
4KB-17521-00	C- 8
4KB-17523-00	C- 7
22U-17527-01	C- 9
4KB-17531-00	C- 8
4KB-17531-10	C- 8
4KB-17531-20	C- 8
4KB-17531-30	C- 9
4KB-17531-40	C- 9
4KB-17531-50	C- 9
4KB-17531-60	C- 9
52G-17531-01	C- 8
52G-17531-11	C- 8
52G-17531-21	C- 8
52G-17531-31	C- 8
52G-17531-41	C- 8
52G-17531-51	C- 8
1J7-17537-Y0-30	D- 5
1J7-17537-Y0-40	D- 5
1J7-17537-Y0-50	D- 5
4KB-17551-00	C- 8
2HR-17556-01	C- 8
4KB-17576-00	C- 9
4WU-17582-00	C- 6
4WU-17583-00	C- 7
4KB-1761A-00	C- 9
4KB-17811-00	F- 11
59V-17831-00	F- 11
59V-17841-00	F- 11
4KB-18101-00	C- 10

PART NO.	GRID NO.
4KB-18104-00	C- 10
4KB-18106-00	C- 10
4KB-18110-11	C- 11
4KB-18112-00	C- 11
132-18113-01	C- 11
36Y-18115-00	C- 11
4G0-18127-00	C- 10
4KB-18127-00	C- 10
4KB-18128-00	C- 2
4KB-18140-00	C- 10
2H9-18154-00	C- 11
4KB-18181-00	C- 10
4KB-18185-00	C- 10
4KB-18380-00	C- 11
4KB-18424-00	C- 10
4KB-18431-00	C- 11
4KB-18511-00	C- 10
4KB-18512-00	C- 10
4KB-18513-00	C- 10
4KB-18531-00	C- 10
4GB-18535-00	C- 10
4KB-18540-01	C- 10
4WU-21110-00	C- 12
4KB-2117G-01	C- 13
3HN-2118F-00	F- 9
	F- 10
2HR-21315-02	C- 12
4KB-21316-00	C- 12
4KB-2147A-00	C- 12
4KB-2147J-00	C- 12
4KB-21466-00	C- 12
4WU-2151H-00	F- 9
	F- 10
4WU-2151H-10	F- 10
4WU-21513-00	C- 15
2HR-21521-00	C- 14
4GB-21541-A0	C- 15
4GB-21541-B0	C- 15
4GB-21541-90	C- 15
2HR-21561-00	C- 14
4WU-21568-00	F- 9
	F- 10
4WU-21568-10	F- 10
4KB-21578-00	F- 9
	F- 10
4KB-21578-10	F- 10
1YW-2160A-00	D- 2
2HR-21621-00	D- 2

NUMERICAL INDEX

PARTNO.	GRID NO.
2HR-2163E-00	D- 2
2HR-2163F-00	D- 3
4UH-2163G-10	F- 9
4WU-2163G-10	F- 10
4WU-2163G-40	F- 9
	F- 10
4WU-2163G-50	F- 9
	F- 10
1UJ-21638-00	D- 4
1YW-21638-00	D- 2
59V-21646-00	D- 2
4GB-21652-00	D- 2
2HR-21691-00	D- 2
4SH-21696-00	F- 9
	F- 10
4SH-21696-10	F- 10
41R-21717-00	C- 12
4WU-2173E-30	F- 9
	F- 10
4WU-2173E-40	F- 9
	F- 10
4WU-2173E-51	F- 9
	F- 10
1YW-2174A-10	D- 3
4WU-2179T-00	B- 10
4WU-22110-00	D- 4
1W1-22128-00	D- 11
29U-22141-00	D- 4
4KM-22141-00	D- 4
1J7-22143-00	D- 4
4KB-22189-00	D- 4
4BD-2219X-02	D- 4
4WU-22210-00	D- 11
4KB-22591-00	D- 4
4GB-2331M-00	E- 4
4GB-2331N-00	E- 4
4WU-23350-01	D- 13
2HR-23391-00	C- 15
2HR-23442-00	D- 12
3HN-23501-01	E- 2
3HN-23502-01	E- 3
2HR-23526-00	D- 13
4WU-23540-00	D- 13
4WU-23550-00	D- 13
4KB-23570-10	D- 13
1UY-23812-00	D- 12
4WU-23813-00	D- 12
6K1-23814-00	D- 12

PARTNO.	GRID NO.
2GU-23831-01	D- 12
1UY-23841-01	D- 12
1UY-23845-01	D- 12
4BD-23868-00	D- 12
2GU-23872-00	C- 12
1UY-23894-01	D- 12
2HR-24110-01	D- 14
2HR-2414H-00	D- 14
3FA-2415A-00	F- 9
	F- 10
3FA-2415A-10	F- 10
4SH-2416E-00	F- 10
2HX-24181-00	D- 14
4WU-24181-00	C- 13
2HR-24500-01	D- 14
4X8-24512-00	D- 14
3AJ-24523-00	D- 14
3AJ-24534-00	D- 14
1UY-24610-00	D- 14
3HN-24710-41	D- 15
509-24724-00	D- 15
3HN-24731-41	D- 15
22W-24741-00	D- 15
59V-24775-00	D- 15
59V-24776-01	D- 15
24W-2483H-00	E- 13
4SH-24841-00	E- 13
4SH-24842-00	E- 13
3MX-24875-00	F- 9
	F- 10
3MX-24875-10	F- 10
4GB-24877-00	F- 9
	F- 10
4GB-24877-10	F- 10
4SH-24897-00	F- 9
	F- 10
4SH-24897-10	F- 10
4KB-2510F-00	E- 2
	E- 3
4KB-2510G-00	E- 2
	E- 3
4KB-2510H-00	E- 2
	E- 3
4KB-2510J-00	E- 2
	E- 3
3HN-2511G-01	E- 2
	E- 3
4KB-2511H-00	E- 2

PARTNO.	GRID NO.
4KB-2511H-00	E- 3
3HN-25111-02	E- 2
	E- 3
52H-2512A-00	E- 2
	E- 3
	E- 8
3HN-2512G-01	E- 2
	E- 3
4KB-2512H-00	E- 2
	E- 3
2HR-2512J-00	E- 2
	E- 3
3GH-25129-00	E- 5
	E- 6
	E- 7
2HR-25133-00	E- 5
	E- 6
3HN-25180-00-33	E- 2
	E- 3
4GB-2531E-00	E- 8
4GB-25321-00	E- 7
3Y6-2533A-01	E- 7
2NL-25335-01	E- 2
	E- 3
4GB-25336-00	E- 8
4GB-25351-00	E- 7
148-25353-00	E- 7
4GB-25355-00	E- 7
4WU-25381-00	E- 8
2HR-25383-01	E- 7
4KB-25390-01-33	E- 7
2HR-25738-00	E- 5
2HR-25748-00	E- 6
2HR-25814-00	E- 5
	E- 6
4H7-25852-00	E- 11
4L0-25854-00	E- 11
2GU-25866-00	E- 11
56A-25867-00	E- 11
2GU-25870-00	E- 11
4KB-25871-00	E- 11
4KB-25872-00	E- 11
4WU-25873-00	E- 11
4GB-25875-00	E- 11
4GB-25876-00	E- 11
4KB-25882-00	E- 11
3HN-25883-00	E- 5
	E- 6

PARTNO.	GRID NO.
3HN-25950-00	E- 5
2HR-25952-00	E- 5
	E- 6
3HN-25960-00	E- 5
3HN-25980-00	E- 5
3HN-25990-00	E- 6
3HN-26111-00	E- 9
4KB-2612E-00	E- 10
4KB-26124-00	E- 9
1NV-26129-00	E- 9
4WU-26150-00	E- 9
3GB-26241-00	E- 9
1NV-2625G-01	E- 9
4KB-26250-00	E- 9
1UY-26259-00	E- 11
4KB-2628F-00	E- 9
4KB-2628G-00	E- 9
1NV-26304-00	E- 9
4WU-26311-00	E- 9
4WU-26341-00	E- 9
20E-26343-00	E- 9
	E- 12
4WU-2637E-00	E- 9
341-26397-01	E- 8
	F- 7
1NV-26398-00	E- 9
1A0-27114-00	D- 4
109-27114-00	D- 4
371-27114-00	D- 15
4N0-27114-00	E- 13
3HN-27208-00	E- 5
3HN-27208-10	E- 5
4WU-27211-00	E- 12
4WU-27231-00	E- 12
J10-27281-00	E- 5
	E- 6
3HN-27282-00	E- 5
	E- 6
4KB-27411-00	E- 12
4WU-27421-00	E- 12
4WU-27445-00	E- 12
4WU-27446-00	E- 12
2XK-28100-00	C- 13
1NV-2811A-00	C- 13
3GH-2819R-00	F- 9
26H-28349-00	C- 15
2HR-28415-00	E- 13
4WU-2845N-00	E- 13

PARTNO.	GRID NO.
4WU-2845N-10	E- 13
3GH-2845R-00	E- 13
3GH-2845R-10	E- 13
4GB-46101-03	D- 5
2H7-46102-00	D- 5
3HN-46108-00	D- 9
24W-46117-00-25	D- 6
24W-46117-00-30	D- 6
24W-46117-00-40	D- 6
24W-46117-00-50	D- 6
4KB-46117-A0	D- 7
4KB-46117-B0	D- 7
4KB-46117-C0	D- 7
4KB-46117-D0	D- 7
4KB-46117-E0	D- 7
4KB-46117-F0	D- 7
4KB-46117-G0	D- 7
4KB-46117-H0	D- 8
4KB-46117-J0	D- 8
4KB-46117-K0	D- 8
4KB-46117-L0	D- 8
4KB-46117-M0	D- 8
4KB-46117-N0	D- 8
4KB-46117-00	D- 7
4KB-46117-10	D- 7
4KB-46117-20	D- 7
4KB-46117-30	D- 7
4KB-46117-40	D- 7
4KB-46117-50	D- 7
4KB-46117-60	D- 7
4KB-46117-70	D- 7
4KB-46117-80	D- 7
4KB-46117-90	D- 7
24W-46118-00-12	D- 5
24W-46118-00-14	D- 5
24W-46118-00-16	D- 5
24W-46118-00-18	D- 5
24W-46118-00-20	D- 5
4KB-46119-A0	D- 9
4KB-46119-B0	D- 9
4KB-46119-C0	D- 9
4KB-46119-D0	D- 9
4KB-46119-E0	D- 9
4KB-46119-F0	D- 9
4KB-46119-G0	D- 9
4KB-46119-H0	D- 9
4KB-46119-J0	D- 9
4KB-46119-K0	D- 9

PARTNO.	GRID NO.
4KB-46119-L0	D- 9
4KB-46119-M0	D- 9
4KB-46119-N0	D- 9
4KB-46119-00	D- 8
4KB-46119-10	D- 8
4KB-46119-20	D- 8
4KB-46119-30	D- 8
4KB-46119-40	D- 8
4KB-46119-50	D- 8
4KB-46119-60	D- 9
4KB-46119-70	D- 9
4KB-46119-80	D- 9
4KB-46119-90	D- 9
2HR-46123-00	D- 6
4KB-46123-00	C- 9
29U-46125-00	D- 5
4KB-46127-00	D- 7
4KB-46127-10	D- 7
4KB-46127-20	D- 7
4KB-46127-30	D- 7
4KB-46127-40	D- 7
4KB-46127-50	D- 7
4KB-46127-60	D- 7
4KB-46146-10	D- 8
3HN-46151-00	D- 5
3HN-46152-01	D- 5
1FK-46156-00	D- 6
1FK-46157-00-15	D- 6
1FK-46157-00-20	D- 6
4KB-46161-00	D- 7
4KB-46162-00	D- 7
4KB-46172-00	D- 6
4KB-46173-00	D- 9
1YW-46180-00	D- 6
1YW-46187-00	D- 6
2HR-46187-00	D- 9
4KB-46470-10	D- 8
4GB-46513-00	E- 8
4KB-81800-00	E- 15
4KB-81815-00	E- 15
4KB-81818-00	E- 15
4KB-81820-00	E- 15
3GD-81826-00	E- 15
4H7-81840-00	E- 15
4H7-81843-50	E- 15
4H7-81844-50	E- 15
1UY-81847-50	E- 15
8L6-81847-50	E- 15

NUMERICAL INDEX

PART NO.	GRID NO.
59V-81920-00	F- 8
4KB-81940-00	F- 7
59V-81942-00	F- 8
29U-81950-93	F- 6
4KB-81960-02	F- 6
3WP-81980-00	F- 7
24W-82110-G0	F- 6
24W-82110-60	F- 6
2HR-82115-00	F- 6
2HR-82116-00	F- 6
371-82121-00	F- 6
5Y1-82122-00	F- 6
4WU-82128-00	F- 6
4GB-82129-00	F- 6
4HF-82150-00	F- 8
4KB-82150-00	F- 7
1AE-82151-00	F- 7
42X-82151-00	F- 8
3KJ-82310-10	F- 6
371-82370-00	F- 6
4GB-82510-00	F- 6
4KB-82540-01	F- 6
59V-82541-00	F- 7
2HT-82560-10	F- 6
3HN-82579-00	F- 6
4WU-82590-00	F- 7
4WU-82590-30	F- 7
1UA-82591-00	C- 13
1YW-82911-01	F- 5
2XJ-82913-00	F- 5
4V4-82913-00	E- 9
4KB-83500-00	F- 11
123-83516-21	F- 7
3GH-83523-00	F- 11
2HR-83530-01	F- 7
24W-83530-01	F- 6
52G-83530-01	F- 7
4WU-83550-00	F- 11
3JN-83664-00	F- 11
2HT-83912-00	F- 5
38W-83922-00	F- 5
437-83936-01	F- 7
437-83936-11	E- 8
	F- 7
	F- 11
1YW-83965-00	F- 5
4GB-83973-00	F- 5
1YW-83980-00	F- 5
26A-8411H-00	F- 2
2HR-84111-00	C- 15
18A-84131-00	F- 2
18A-84132-00	F- 2
26A-84143-00	F- 2
2HR-84310-40	F- 2
19G-84314-00	F- 2
3L6-84521-00	F- 4
1K8-84523-00	F- 3
	F- 4
2E9-84524-00	F- 3
	F- 4
3GH-84702-00	F- 4
3HN-84710-00	F- 4
52H-84710-00	F- 3
3GD-84714-00	F- 3
	F- 4
21V-84721-00	F- 3
2EK-85111-00	F- 8
3Y6-85130-02	F- 8
449-85131-02	F- 8
4KB-85510-11	E- 14
4SH-85540-00	F- 6
4KB-85550-10	E- 14
90101-06278	E- 7
90101-10303	B- 7
90101-10568	B- 5
90105-06738	C- 13
90105-082A7	D- 8
90105-08756	D- 8
90105-08759	D- 8
90105-10051	C- 12
90105-102A8	D- 8
90105-10253	D- 13
90105-10388	D- 13
90105-10421	B- 2
90105-10422	B- 2
90105-10454	C- 12
90105-10549	D- 13
90105-10747	C- 12
90105-10751	E- 8
90105-12425	D- 11
90109-063F7	C- 10
90109-06576	F- 5
90109-06577	F- 5
90109-06723	F- 6
90109-082A1	C- 8
90110-05201	C- 15
90110-06224	B- 8
90110-08234	B- 14
90114-10010	E- 7
90114-10012	E- 2
	E- 3
	E- 8
90116-06503	B- 2
90116-10593	D- 5
90119-06044	F- 6
90119-06056	D- 2
90119-06060	D- 2
90119-06063	C- 13
90119-06073	D- 14
90119-06096	B- 10
90123-08046	F- 5
90149-04278	E- 9
90149-06011	D- 14
90149-06131	F- 5
90149-08152	C- 8
90151-05023	B- 15
90151-06010	B- 8
90151-06025	C- 2
90151-06058	B- 8
90151-06062	C- 10
90154-05005	C- 14
	D- 2
90154-05013	C- 15
90154-05052	D- 2
90159-05018	F- 8
90159-06010	C- 5
90159-06082	C- 15
90170-05362	C- 15
90170-06010	F- 5
90170-06228	C- 11
90170-10166	D- 12
90170-16326	B- 5
	C- 5
90171-10046	D- 12
	D- 13
90171-16048	E- 2
	E- 3
	E- 8
90179-06668	B- 13
90179-08148	F- 5
90179-10394	D- 6
90179-10540	E- 2
	E- 3
	E- 7
90179-16671	D- 8
90179-22526	C- 8
90179-22640	C- 5
90179-55660	C- 9
90179-60664	D- 8
90179-65305	C- 8
90183-05024	C- 15
90185-10060	D- 13
90185-10115	D- 12
90185-12072	D- 11
90185-14070	C- 8
	C- 9
90201-05029	C- 14
	C- 15
	D- 2
90201-05725	F- 11
90201-060L5	D- 14
90201-06071	C- 14
90201-06074	C- 14
	F- 3
	F- 4
90201-06380	C- 13
90201-06557	B- 13
90201-08085	B- 10
90201-08093	C- 10
90201-08326	B- 13
90201-086J0	B- 13
90201-086R7	D- 8
90201-08612	C- 14
90201-101J1	C- 12
	E- 8
90201-10118	E- 7
	E- 11
90201-10128	B- 2
90201-10430	D- 13
90201-10591	B- 7
90201-107F8	B- 5
90201-10774	D- 6
	D- 12
90201-12163	F- 11
90201-12166	C- 11
90201-12172	F- 6
90201-123K4	C- 4
90201-127J6	D- 11
90201-14633	C- 8
	C- 9
90201-14691	C- 10
90201-150U6	C- 7
90201-15797	C- 11
	E- 12
90201-162L6	E- 8
90201-163M0	E- 2
	E- 3
90201-20276	C- 6
90201-225M9	D- 10
90201-25291	C- 4
90201-266F6	C- 6
90201-301P3	C- 5
90202-05193	D- 14
90202-14077	F- 3
	F- 4
90209-06174	B- 9
90209-21338	C- 6
90209-22191	C- 6
90215-06162	B- 2
90215-08260	C- 10
90215-16270	B- 5
90215-16289	C- 5
90240-06076	E- 12
90240-12092	D- 11
90249-12008	E- 9
	E- 12
90280-05048	B- 5
90282-05034	B- 5
90336-28053	D- 12
90338-28221	B- 15
90338-34069	D- 4
90340-14029	D- 6
90340-14046	D- 5
90340-14117	B- 15
90387-060A7	B- 9
90387-06024	C- 13
90387-062L2	B- 13
90387-06299	C- 14
90387-06595	F- 4
90387-066J1	D- 14
90387-07598	D- 14
90387-090R0	D- 12
90387-1504G	C- 7
90387-16547	B- 4
90387-1707V	D- 4
90387-176R6	D- 12
90387-1904J	C- 6
90387-2104H	C- 6
90387-255H9	D- 5
90387-281V8	E- 2
90387-281V8	E- 3
90387-284T0	E- 8
90401-06001	B- 2
90401-08038	B- 8
90401-08117	B- 9
90401-10159	E- 11
90430-06192	B- 2
90430-08119	B- 8
	B- 9
90430-14043	B- 8
90430-14131	B- 2
90445-070J5	D- 9
90445-074F6	D- 6
90445-07761	E- 6
90445-083J8	E- 8
90445-08336	F- 6
90445-09304	D- 14
90445-110F2	D- 14
90450-49020	B- 10
90460-56105	B- 10
90460-58124	B- 10
90460-99289	D- 4
90464-12089	F- 7
90464-23139	E- 6
	F- 7
90465-08377	C- 2
90465-10098	F- 7
90467-06016	D- 9
90467-06043	E- 6
90467-07029	D- 6
90467-07093	E- 6
90467-08075	E- 8
90467-10008	D- 14
90467-14015	B- 2
90467-22060	B- 10
90468-15020	F- 11
90468-20196	D- 11
90480-01400	C- 14
	D- 14
90480-01590	B- 13
90480-14088	F- 3
	F- 4
90480-15058	C- 12
90480-15235	B- 9
90480-18290	D- 14
90480-25461	C- 15
	F- 11
90501-082E3	B- 8

NUMERICAL INDEX

PART NO.	GRID NO.
90501-10245	E- 12
90501-10312	F- 5
90501-10782	E- 9
90501-18576	B- 8
90501-22721	B- 5
90501-234F8	D- 10
90501-23598	C- 5
90501-605E1	C- 9
90506-12489	C- 10
90506-16318	E- 12
90506-16482	E- 8
90507-20002	E- 7
90508-186A5	C- 11
90508-23567	D- 15
90508-32711	C- 10
90560-06243	E- 13
90560-07007	F- 3
90560-30325	E- 2
	E- 3
91A20-07010	B- 12
91317-05012	E- 14
91317-06020	B- 2
91317-06025	B- 2
	B- 15
91317-06030	B- 4
91317-08016	C- 4
91317-08025	B- 10
91317-08050	B- 2
91401-20012	E- 12
91401-20020	D- 12
	D- 13
91401-30030	E- 2
	E- 3
	E- 8
92017-06012	B- 2
92017-06014	B- 13
92902-04100	E- 5
	E- 6
92907-04600	F- 2
92907-05100	E- 9
	F- 8
92907-05200	F- 8
92907-05600	B- 10
	E- 9
92907-06100	D- 15
	E- 14
	F- 3
	F- 4

PART NO.	GRID NO.
92907-06100	F- 5
92907-06200	E- 12
92907-06600	B- 7
	B- 8
	E- 11
	E- 14
	F- 6
92907-08600	C- 8
	D- 6
	E- 11
92907-10100	B- 5
93101-17113	B- 15
93101-35097	C- 8
	E- 7
93101-38098	D- 5
93101-52116	D- 5
93102-08307	F- 11
93102-12106	B- 15
93102-14209	B- 15
93102-25017	D- 4
93102-25081	C- 12
93102-25099	C- 12
93102-28476	B- 15
93102-38383	E- 2
	E- 3
93102-38417	E- 2
	E- 3
93102-44454	C- 9
93102-65386	D- 5
93103-38178	D- 8
93104-09025	E- 9
93104-17094	C- 6
93104-20068	C- 7
93105-22029	D- 8
93106-42037	E- 7
93112-31011	D- 12
93210-06422	C- 5
93210-06632	B- 9
93210-07590	C- 10
93210-09165	B- 6
93210-12152	B- 9
93210-14104	E- 7
	F- 11
93210-14369	B- 15
93210-15414	C- 11
93210-16290	C- 3
93210-17718	D- 4
93210-18322	B- 4

PART NO.	GRID NO.
93210-19522	B- 15
93210-24253	F- 11
93210-26608	E- 2
	E- 3
	E- 8
93210-313A0	D- 8
93210-35520	B- 8
93210-41041	C- 13
93210-44545	B- 10
93210-54452	B- 8
93210-57634	B- 2
93210-59531	D- 5
93210-78544	C- 8
93210-85706	D- 6
93210-86509	B- 4
93211-06635	B- 2
93211-51749	D- 5
93306-00308	C- 10
93306-00426	C- 7
93306-00515	B- 7
93306-00612	C- 9
	E- 2
	E- 3
93306-00805	E- 7
93306-07801	B- 15
93306-07804	D- 8
93306-20301	C- 6
93306-20313	B- 15
93306-20331	C- 12
93306-20401	C- 7
93306-20517	C- 9
93306-20531	E- 7
93306-20532	B- 5
93306-20636	C- 8
93306-20715	C- 8
93306-27202	C- 6
93306-30424	C- 7
93306-30538	C- 8
93306-30568	D- 5
93306-37210	D- 8
93310-212R6	C- 4
93310-225N0	C- 4
93315-32516	B- 7
93316-01301	D- 5
93317-85569	D- 5
93332-00080	D- 4
93399-99923	D- 6
93399-99926	D- 9

PART NO.	GRID NO.
93399-99938	D- 6
93410-20038	C- 6
93410-22039	D- 6
	D- 9
93410-25017	C- 6
93410-26067	C- 7
93420-13073	B- 8
93430-12008	C- 11
	E- 12
93430-23046	D- 6
93440-12052	B- 2
93440-14155	F- 11
93440-15012	C- 7
93440-20088	D- 9
93440-23165	D- 6
93440-24173	C- 6
93440-25020	C- 6
93450-19095	B- 5
93511-32017	C- 5
93603-07073	B- 8
93603-12030	B- 8
93603-14240	F- 11
93604-10011	B- 7
93605-10090	B- 5
93608-50149	C- 10
93612-16254	B- 9
93900-00022	E- 2
	E- 3
	E- 7
94108-1210G	E- 2
	E- 3
94110-1210H	E- 7
94500-02090	B- 7
94701-00157	B- 3
94701-00181	B- 3
94701-00333	B- 3
95027-06008	F- 7
95027-06012	B- 9
	C- 3
95027-06025	B- 7
95027-06030	B- 14
	B- 15
	E- 15
95027-06040	B- 15
95027-06050	B- 14
	B- 15
95027-06060	B- 14
95027-10016	E- 7

PART NO.	GRID NO.
95302-06600	E- 15
95304-06700	C- 11
95307-05600	F- 8
	F- 11
95307-05700	E- 9
95307-06600	E- 7
	F- 4
95307-06800	F- 3
95307-08700	C- 10
95307-10700	D- 12
95337-10600	D- 13
95607-05100	E- 9
95607-06100	E- 13
	F- 5
95607-06200	D- 2
95617-08200	C- 12
95617-10200	C- 12
95702-06100	C- 3
95707-05300	C- 14
	C- 15
	D- 2
95707-05500	F- 8
95707-06500	C- 14
	F- 11
95707-08500	E- 12
95807-06010	D- 3
95807-06012	E- 10
95807-06016	F- 11
95807-06020	B- 9
95807-06025	F- 4
95807-06030	D- 14
95807-08020	C- 14
95812-06012	E- 5
	E- 6
95817-06012	C- 11
	C- 15
95817-06030	C- 14
95817-08012	C- 12
	E- 13
95817-08016	B- 13
	C- 12
	E- 5
	E- 6
	E- 12
	E- 13
95817-08040	E- 8
95817-08055	C- 12
95817-08085	C- 12

PART NO.	GRID NO.
95817-10020	E- 12
95817-10045	D- 6
95827-06012	E- 11
	F- 6
95827-06035	E- 13
95827-08012	D- 4
	E- 12
95827-08050	D- 12
95827-10016	D- 4
97007-06008	B- 13
97007-06012	B- 2
	D- 15
97007-06020	F- 6
97007-06025	E- 11
97017-06020	C- 11
97017-08025	B- 13
97027-06016	B- 7
97027-08025	D- 6
97027-08030	C- 8
	E- 11
97027-08060	D- 12
97707-40510	F- 2
97801-03008	D- 14
98502-04006	E- 5
	E- 6
98507-04008	B- 11
98507-04012	B- 11
98507-05016	B- 10
98507-05018	E- 9
98507-05020	E- 9
98507-06010	B- 15
98507-06016	F- 11
98507-06020	F- 5
98507-06030	E- 14
	F- 11
98706-04012	E- 11
98707-06016	B- 14
98707-06030	B- 8
98907-05014	C- 15
98907-06020	F- 6
99009-12400	C- 4
	C- 11
99530-10014	B- 14
99530-10114	B- 15
99530-14016	B- 2
	B- 4